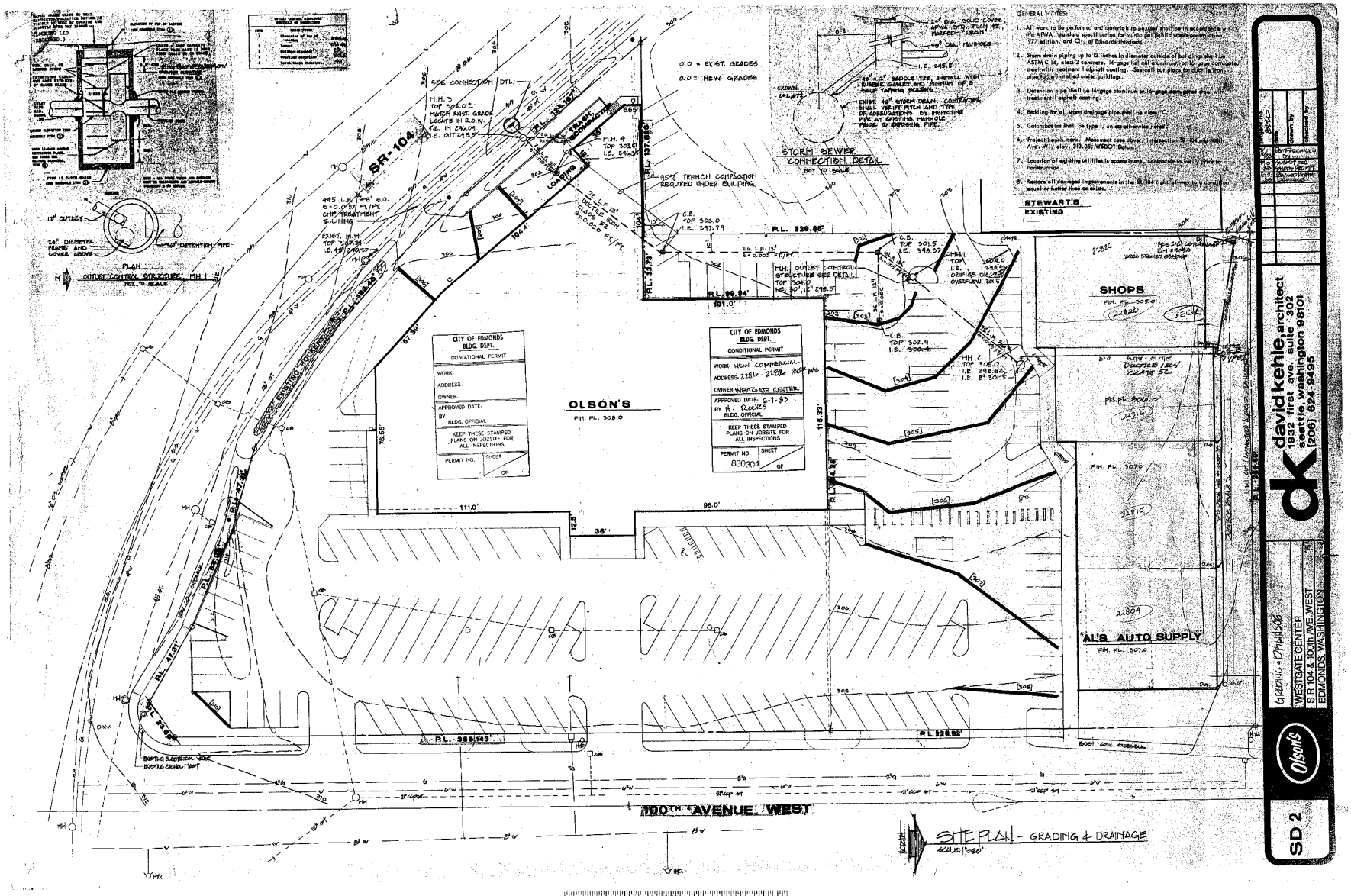
SR-104
OLSON'S
FIN. FL. 308.0
SHOPS
FIN. FL. 307.0
AL'S AUTO SUPPLY
FIN. FL. 307.0
100TH AVENUE WEST
CITY OF EDMONDS BLDG. DEPT.
CONDITIONAL PERMIT
WORK: NEW COMMERCIAL
ADDRESS: 21814-21824 100TH AVE
OWNER: WESTGATE CENTER
APPROVED DATE: 6-7-83
BY H. CLARKS
BLDG. OFFICIAL
KEEP THESE STAMPED PLANS ON JOBSITE FOR ALL INSPECTIONS
PERMIT NO. 830304
SHEET OF
STORM SEWER CONNECTION DETAIL
NOT TO SCALE
STEWART'S EXISTING
PLAN
OUTLET CONTROL STRUCTURE, MH 1
NOT TO SCALE
SITE PLAN - GRADING & DRAINAGE
SCALE: 1"=20'
GENERAL NOTES:
1. All work to be performed and materials to be used shall be in accordance with the AWWA "standard specification for municipal public water construction, 1977 edition, and City of Edmonds standards.
2. Storm drain piping up to 12 inches in diameter outside of buildings shall be ASTM C 14, class 2 concrete, 14 gage galvanized corrugated steel with resistant I asphalt coating. See call out plans for ductile iron pipe to be installed under buildings.
3. Detention pipe shall be 14 gage aluminum or 14 gage corrugated steel with resistant I asphalt coating.
4. Bedding for all storm drainage pipe shall be class "C".
5. Catchbasins shall be type 1, unless otherwise noted.
6. Project bench mark: Monument cap cover, intersection 76th AVE and 196th Ave. W., elev. 313.05; WSDOT datum.
7. Location of existing utilities is approximate, contractor to verify prior to construction.
8. Restore all damaged improvements in the SR-104 right of way to a condition equal or better than as exists.
SD 2
Olson's
david kehle, architect
1932 first ave. suite 302
seattle, washington 98101
(206) 624-9495
WESTGATE CENTER
S.R. 104 & 100th AVE. WEST
EDMONDS, WASHINGTON

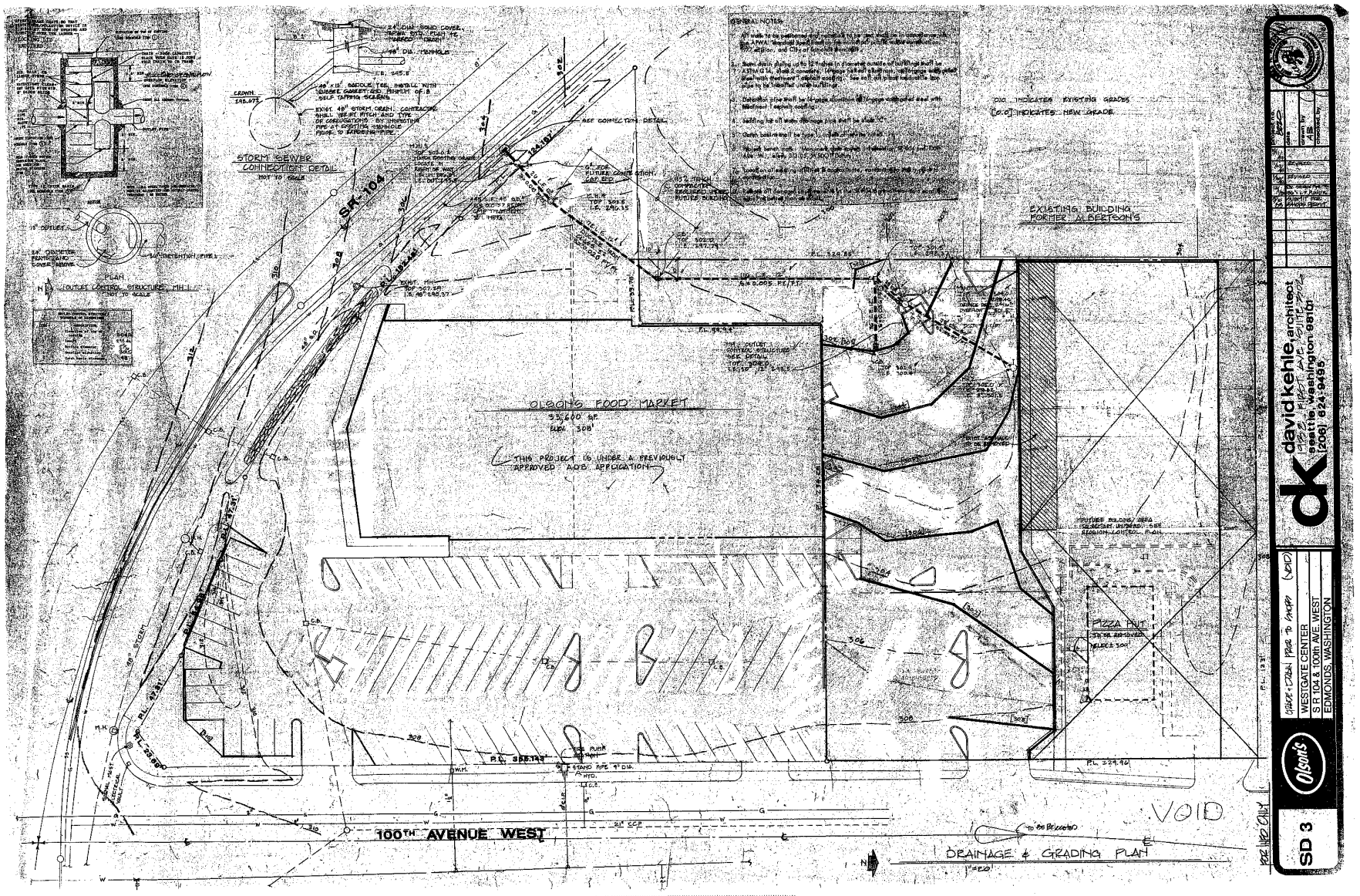
GENERAL NOTES
STORM SEWER CONNECTION DETAIL
NOT TO SCALE
OUTLET CONTROL STRUCTURE, MH 1
NOT TO SCALE
SR-104
OLSON'S FOOD MARKET
33,600 SF
PARK 308
THIS PROJECT IS UNDER A PREVIOUSLY APPROVED ADB APPLICATION
EXISTING BUILDING FORMER ALBERTSON'S
PIZZA HUT
100TH AVENUE WEST
VOID
DRAINAGE & GRADING PLAN
1"=20'
SD 3
WESTGATE CENTER
SR 104 & 100th AVE. WEST
EDMONDS, WASHINGTON
Olson's
dk
david kehle architect
2208 FIRST AVE. SUITE 202
seattle, washington 98121
(206) 624-9495

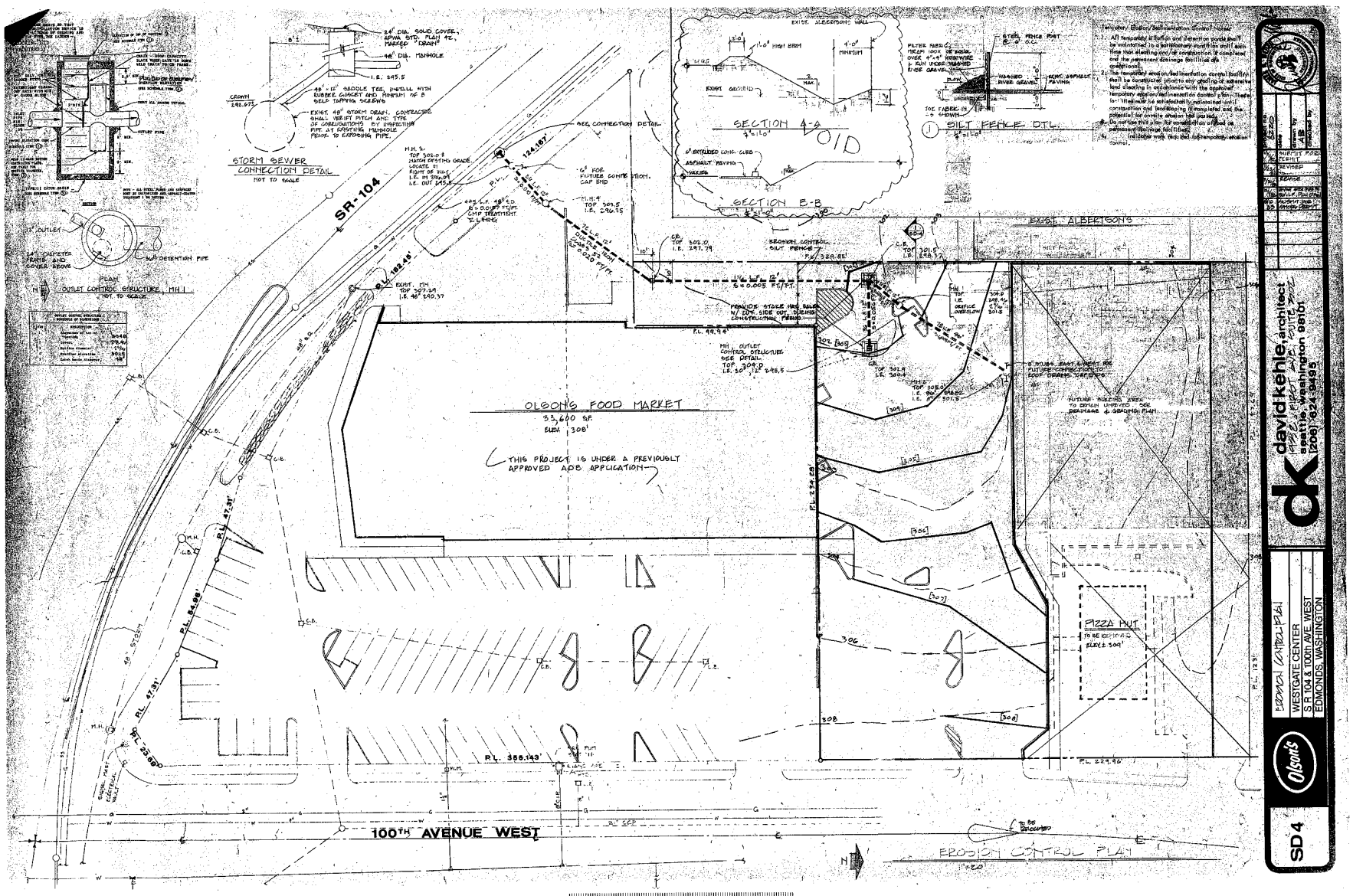
STORM SEWER CONNECTION DETAIL
NOT TO SCALE
OUTLET CONTROL STRUCTURE, MH 1
NOT TO SCALE
SR-104
OLSON'S FOOD MARKET
33,600 SF
ELEV. 308'
THIS PROJECT IS UNDER A PREVIOUSLY APPROVED ADB APPLICATION
PIZZA HUT
EXIST. ALBERTSON'S
SECTION A-A
SECTION B-B
SILT FENCE DTL.
EROSION CONTROL PLAN
100TH AVENUE WEST
EROSION CONTROL PLAN
WESTGATE CENTER
S.R. 104 & 100th AVE. WEST
EDMONDS, WASHINGTON
Olson's
SD 4
dk
david kehle, architect
seattle, washington 98101
(206) 624-0195

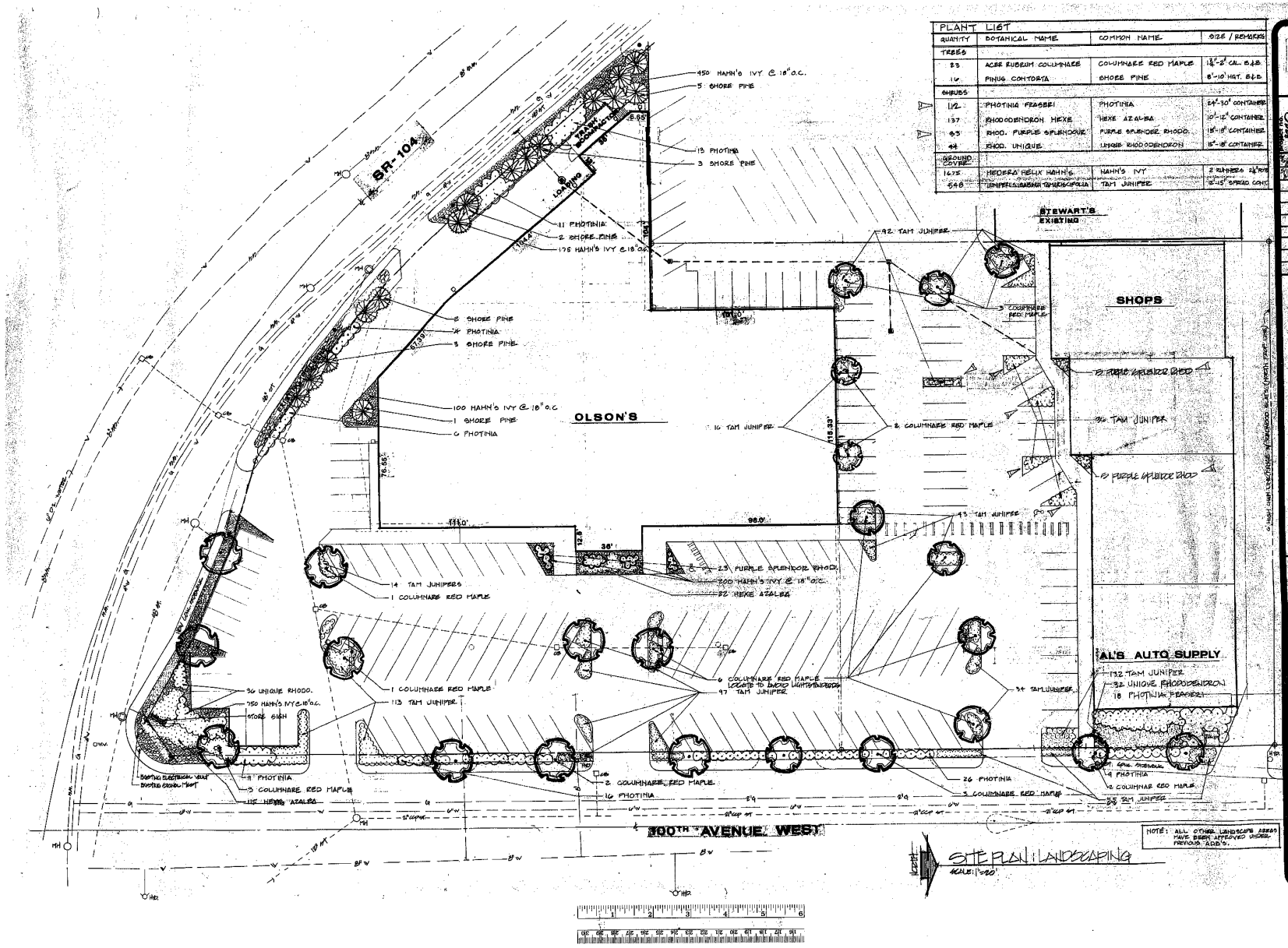

PLANT LIST			
QUANTITY	BOTANICAL NAME	COMMON NAME	SIZE / REMARKS
TREES			
33	ACER RUBRUM COLUMNARE	COLUMNARE RED MAPLE	1½"-2" CAL. B&B
14	PINUS CONTORTA	SHORE PINE	8'-10' HGT. B&B
SHRUBS			
142	PHOTINIA FRASERI	PHOTINIA	24"-30" CONTAINER
137	RHODODENDRON HEKEE	HEKE AZALEA	10"-12" CONTAINER
83	RHOD. PURPLE SPLENDOUR	PURPLE SPLENDOR RHODO.	15"-18" CONTAINER
44	RHOD. UNIQUE	UNIQUE RHODODENDRON	15"-18" CONTAINER
GROUND COVER			
1675	HEDERA HELIX HAHN'S	HAHN'S IVY	2 RUNNERS 24" POT
548	JUNIPERUS SABINA TAMARISCIFOLIA	TAM JUNIPER	12"-15" SPREAD CONT.

NOTE: ALL OTHER LANDSCAPE AREAS HAVE BEEN APPROVED UNDER PREVIOUS ADD'S.

dk david kehle, architect
1932 first ave. suite 302
seattle, washington 98101
(206) 624-9495

LANDSCAPE PLAN

WESTGATE CENTER
SR 104 & 100th AVE. WEST
EDMONDS, WASHINGTON

Olson's

SD 5

© 1982 DAVID KEHLE, ARCHITECT (SEATTLE, WASHINGTON)

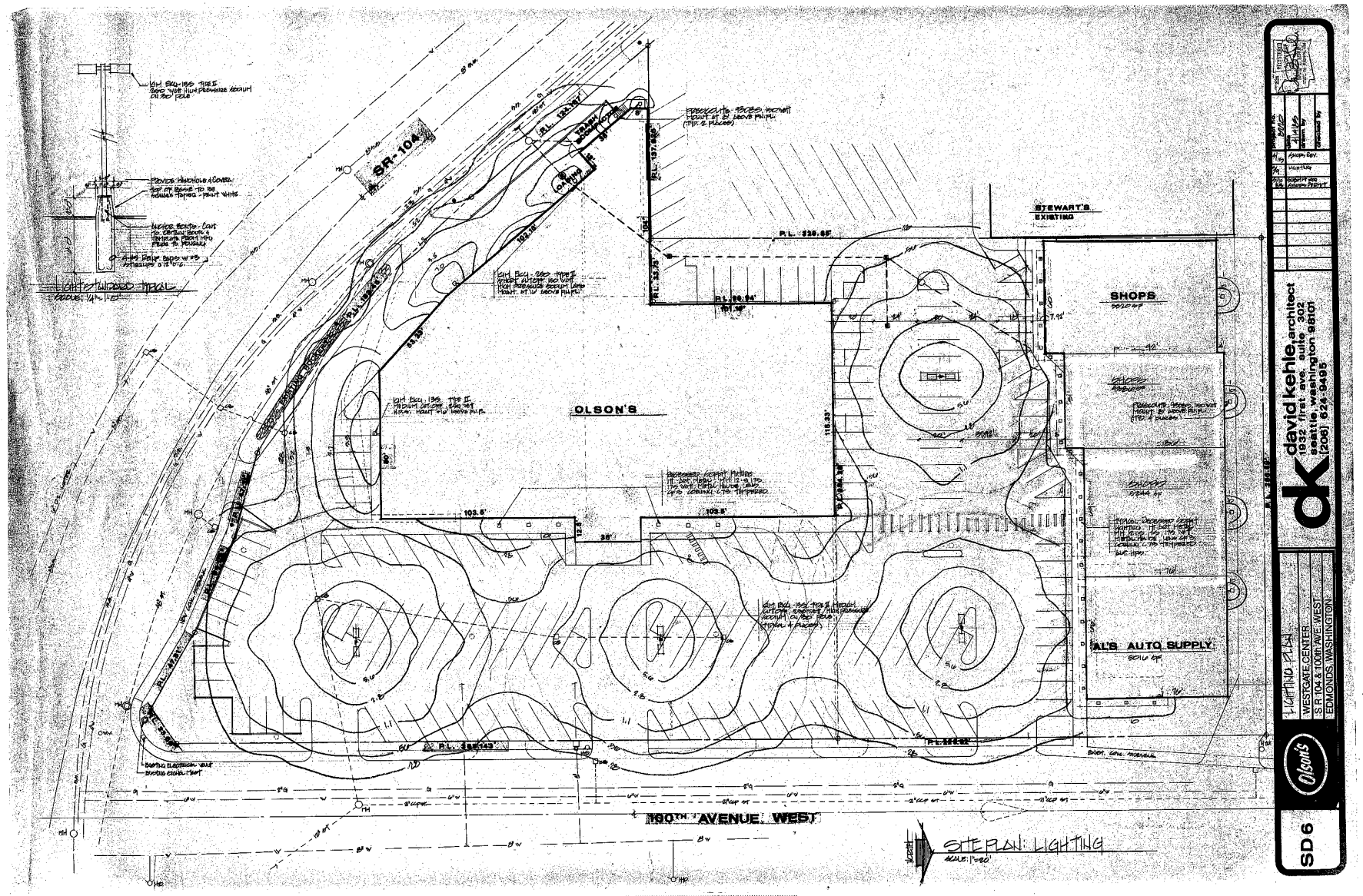

SD 6

Olson's

HIGHLAND PLAZA
WESTGATE CENTER
S.R. 104 & 100th AVE. WEST
EDMONDS, WASHINGTON

dk

david kehle, architect
1932 first ave. suite 302
seattle, washington 98101
(206) 624-9495

4/15	80	PLANNING REV.
2/16	80	MONITORING
2/16	80	SUBMITTED FOR PERMIT PERMIT

DATE 2/16/80
DRAWN BY
CHECKED BY

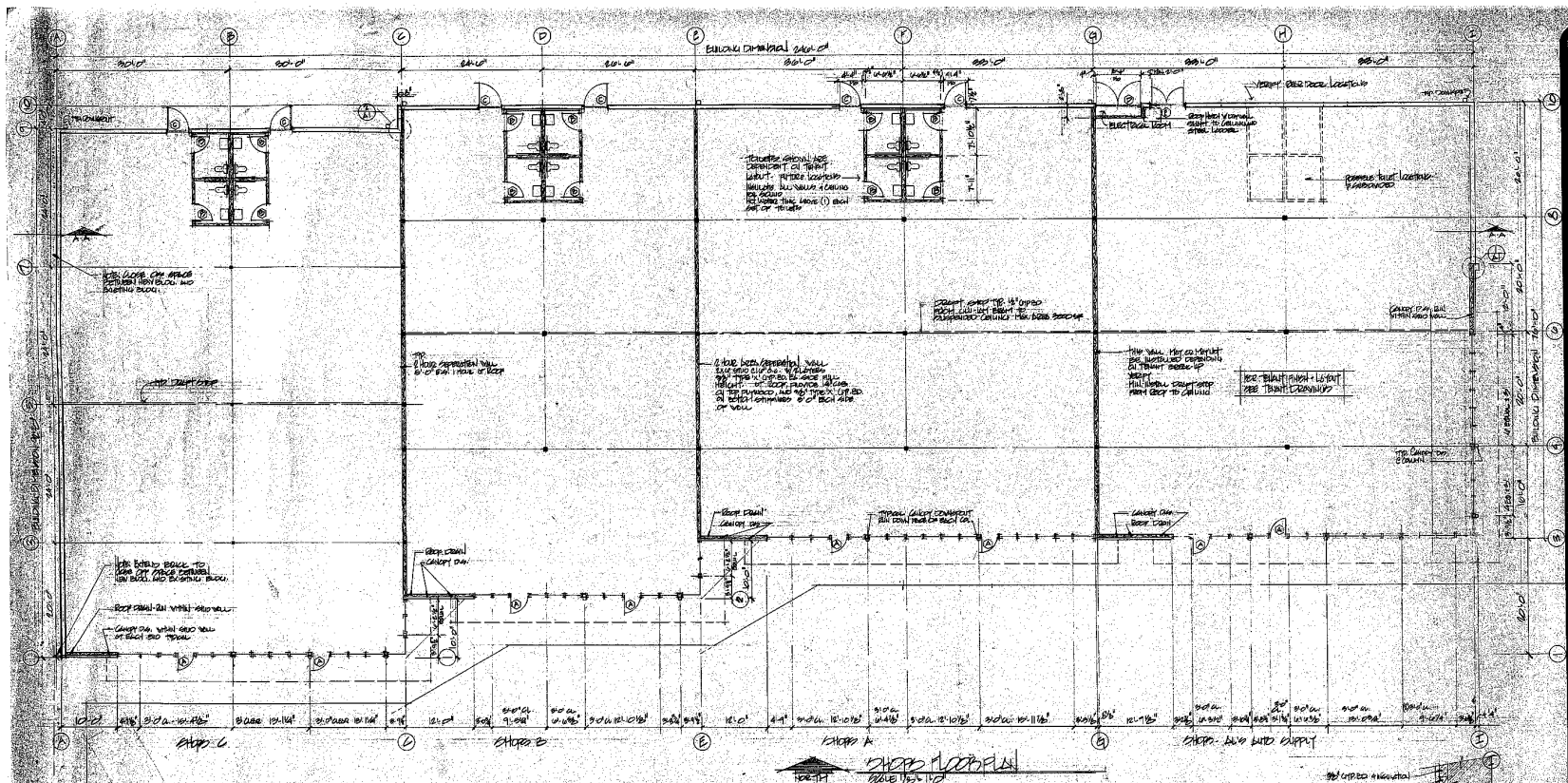

SHOP FLOOR PLAN
SCALE: 1/8" = 1'-0"

ROOM SCHEDULE

NAME	FLOOR: BOX CONC.	FLOOR: VCT	FLOOR: CARPET TILE	FLOOR: VINYL	FLOOR: WOOD	FLOOR: CONCRETE SEALED	BASE: VINYL COVE	BASE: WOOD	CEILING: GYPBD	CEILING: ACOUSTICAL TILE	CEILING: EXPOSED	OTHER: REMARKS	OTHER: HEIGHT
W/O SUPPLY	-	●	-	●	-	-	●	-	-	●	-	TENANT TO DO INTERIOR FINISH	
SHOP A	-	-	-	●	-	●	●	-	-	-	●	BUILDING WALLS & CLG.	
TOILETTE A	-	-	-	●	-	●	●	-	-	-	●		
SHOP B	-	●	-	●	-	●	●	-	-	-	●	BUILDING WALLS & CLG.	
TOILETTES B	-	-	-	●	-	●	●	-	-	-	●		
SHOP C	-	●	-	●	-	●	●	-	-	-	●	BUILDING WALLS & CLG.	
TOILETTE C	-	-	-	●	-	●	●	-	-	-	●		
ELECTRICAL ROOM	●	-	-	-	-	●	-	-	-	-	-	HOSE BIBBS	

DOOR SCHEDULE

MARK	SIZE: WIDTH	SIZE: HEIGHT	DOOR: THICK.	DOOR: TYPE	DOOR: OPTION	DOOR: MATERIAL	FRAME: OPTION	FRAME: MATERIAL	HARDWARE: LOCK	HARDWARE: CLOSER	HARDWARE: FINISH	REMARKS
A	3'-0"	7'-0"	1 3/4"	1	-	ALUM/GLASS	1" x 1"	ALUMINUM	●	●	●	
B	4'-0"	8'-0"	1 3/4"	2	B	AC WOOD	5/8" x 5/8"	WOOD	†	●	●	PRIVACY LOCK
C	3'-0"	7'-0"	1 3/4"	3	-	H. MTL.	5/8" x 5/8"	H. MTL.	●	—	●	
D	3'-0"	7'-0"	1 3/4"	3	-	H. MTL.	5/8" x 5/8"	H. MTL.	●	—	●	
E	3'-0"	7'-0"	1 3/4"	3	-	H. MTL.	5/8" x 5/8"	H. MTL.	●	●	●	

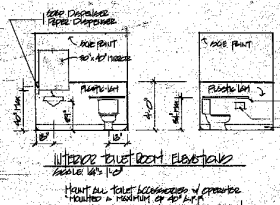

INTERIOR TOILET ROOM ELEVATION
SCALE: 1/4" = 1'-0"

MOUNT ALL TOILET ACCESSORIES W/ OPERATOR HEIGHT A MAXIMUM OF 40" A.F.F.
WRAP HOT WATER SUPPLY & DRAIN WITH INSULATION

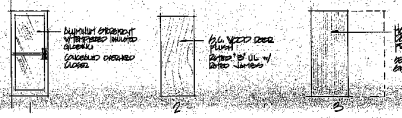

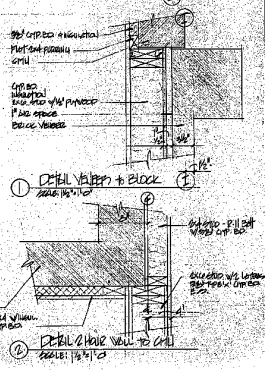

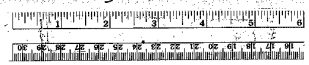

dk
david kehle, architect
1932 first ave. suite 302
seattle, washington 98101
(206) 624-9495

Olson's

WESTGATE CENTER
S.R. 104 & 100th AVE. WEST
EDMONDS, WASHINGTON

A 1

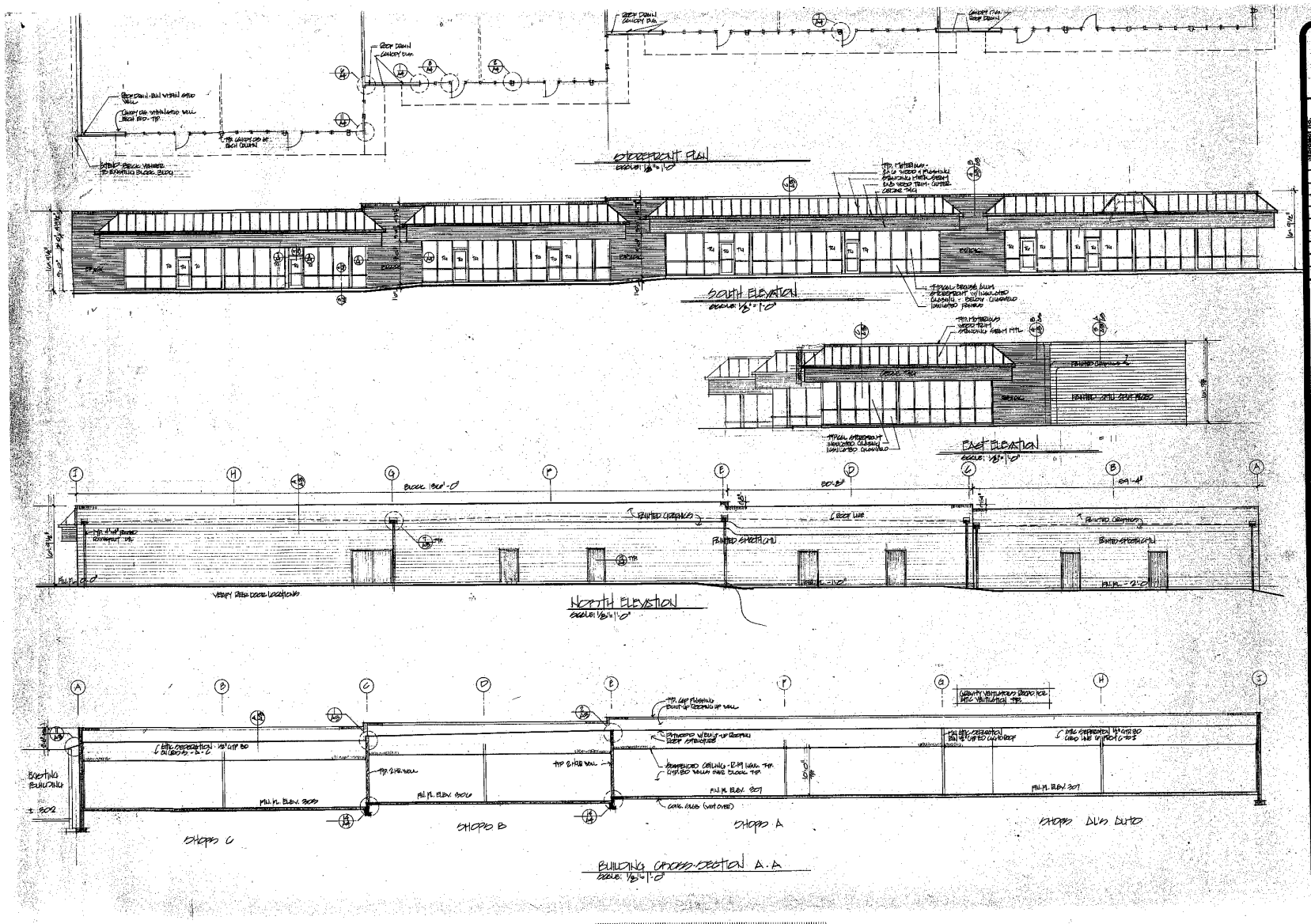

3/10	95	PLANNING REVIEW
3/10	95	PLANNING REVISIONS

DRAWN BY: AJ/DJS
CHECKED BY: DJS

dk david kehle, architect
1932 first ave. suite 302
seattle, washington 98101
[206] 624-8495

Olson's

WESTGATE CENTER
S.R. 104 & 100th AVE. WEST
EDMONDS, WASHINGTON

A 2

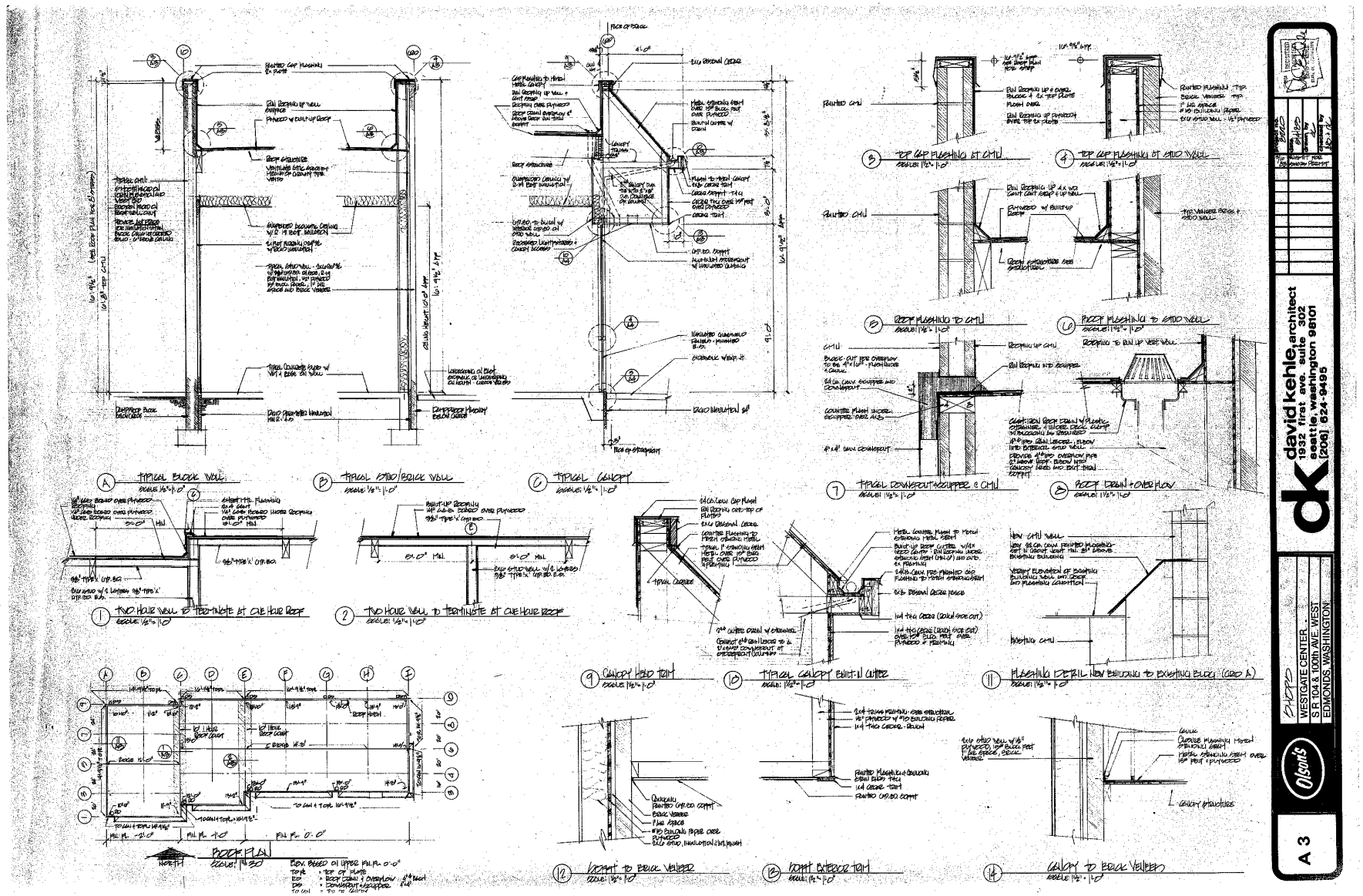

dk david kehle, architect
1932 first ave. suite 302
seattle, washington 98101
(206) 624-9495

Olson's

WESTGATE CENTER
S.R. 104 & 100th AVE. WEST
EDMONDS, WASHINGTON

A 3

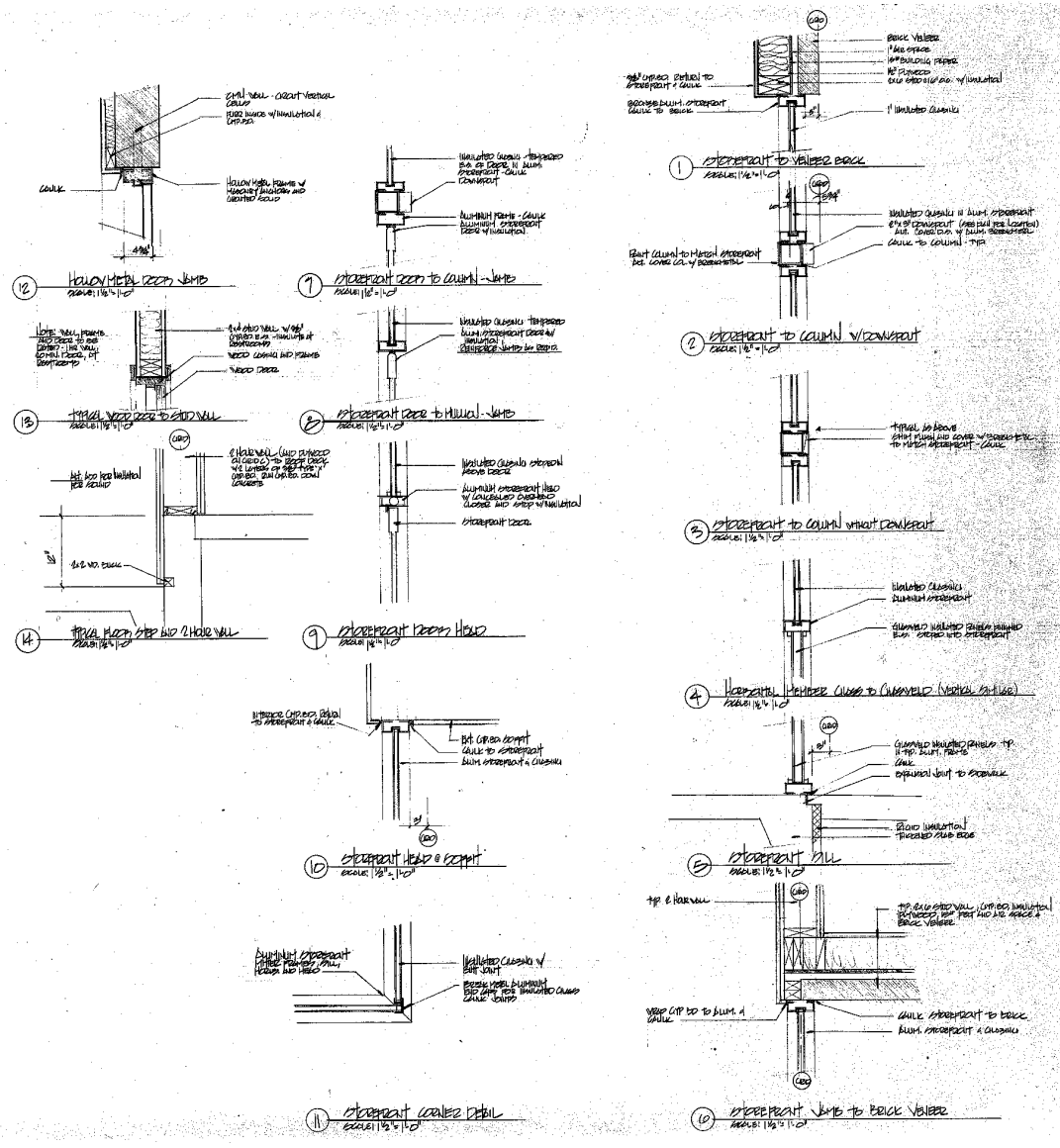

dk david kehle, architect
1932 first ave. suite 302
seattle, washington 98101
[206] 624-9495

Olson's

WESTGATE CENTER
S.R. 104 & 100th AVE. WEST
EDMONDS, WASHINGTON

A 4

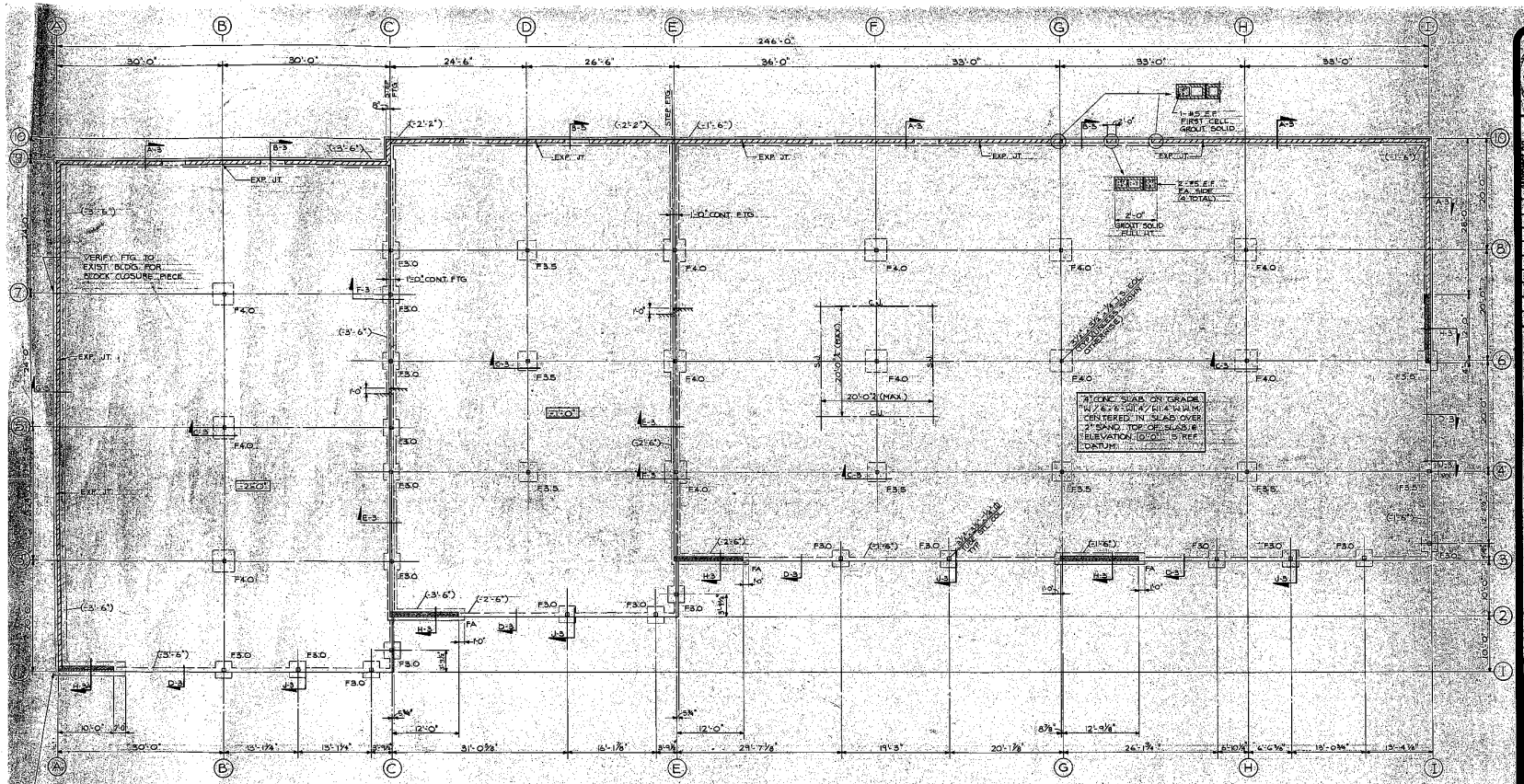

FOUNDATION PLAN

SCALE: 1/8" = 1'-0"

NOTES: 1) ELEVATIONS SHOWN THUS: (—'—") ARE TO BOTTOM OF FOOTING FROM REF. DATUM 0'-0"

FOOTING SCHEDULE		
MARK	SIZE	REINF.
F3.0	3'-0" x 3'-0" x 1'-0"	4 - #5 E.W.
F3.5	3'-6" x 3'-6" x 1'-0"	5 - #5 E.W.
F4.0	4'-0" x 4'-0" x 1'-0"	4 - #5 E.W.

HUDSON & ASSOCIATES
CONSULTING ENGINEERS
1805 12TH AVENUE SUITE 18
SEATTLE, WASHINGTON 98122
TEL (206) 324-6180

dk
david kehle architect
193 first ave. south
seattle, washington 98104
(206) 624-9495

Olsonts

WESTGATE CENTER
S.R. 104 & 100th AVE. WEST
EDMONDS, WASHINGTON

3	8-10-83	Issued for Permit
2	5-9-83	Issued for Permit
1		

Drawn by: R.H.
Checked by: R.H.

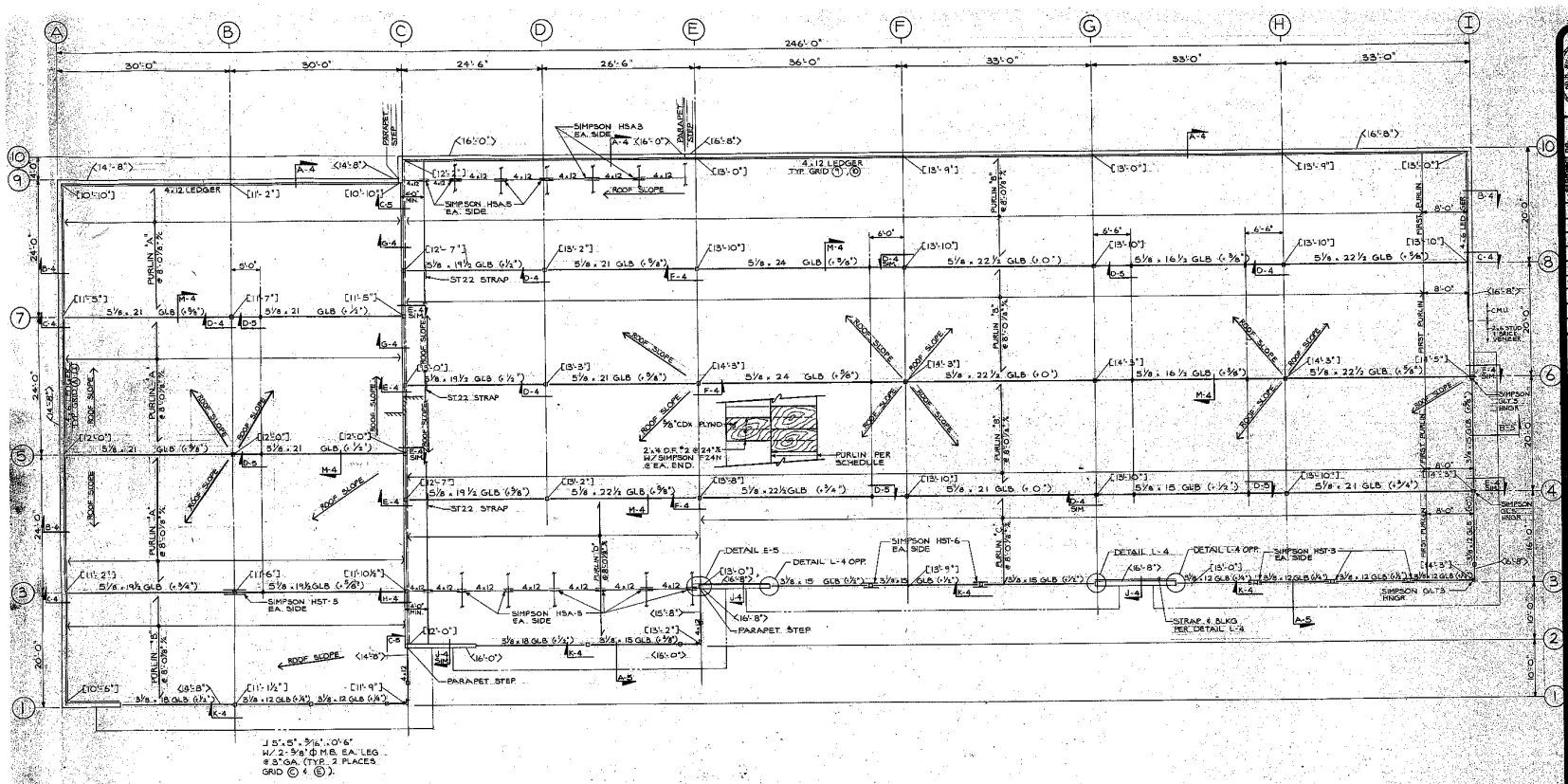

ROOF FRAMING PLAN

SCALE: 1/8" = 1'-0"

NOTES:
1) ELEVATIONS SHOWN THUS: (-'-") ARE TO TOP OF PARAPET (BLOCK) FROM REF. DATUM [0'-0"].
2) ELEVATIONS SHOWN THUS: [-'-"] ARE TO TOP OF FRAMING (BOTTOM OF PLYWOOD) FROM REF. DATUM [0'-0"].
3) NAIL ROOF PLYWOOD W/10d COMMON (.148" Φ & 1 3/8" MIN. PENETRATION) @ 4" % @ EDGES & 12" % FIELD, BETWEEN GRIDS Ⓗ & Ⓘ, AND 6" % @ EDGES & 12" % FIELD FOR BALANCE.

PURLIN SCHEDULE

PURLIN MARK	SIZE	MIN. DIMENSION	Fb
"A"	4 x 16 D.F. #1 OR 4 x 14 D.F. #1 DENSE ROUGH	3 1/2 x 15 1/4 OR 3 5/16 x 13 5/8	1500 PSI OR 1800 PSI
"B"	4 x 14 D.F. #1 OR 4 x 12 D.F. #1 DENSE ROUGH	3 1/2 x 13 1/4 OR 3 5/16 x 11 5/8	1500 PSI OR 1800 PSI
"C"	4 x 12 D.F. #2	3 1/2 x 11 1/4	1250 PSI
"D"	4 x 16 D.F. #1 DENSE OR 3 5/8 x 16 1/2 GLB. (1 1/4")	3 1/2 x 15 1/2 OR 3 5/8 x 16 1/2	1500 PSI OR 2400 PSI

TEL. (206) 324-6180
HUDSON & ASSOCIATES
CONSULTING ENGINEERS
1909 12TH AVENUE SUITE 18
SEATTLE, WASHINGTON 98122

dk david kehle, architect
1932 first ave. suite 302
seattle, washington 98101
(206) 624-8495

DATE	5-10-85
DRAWN BY	JWA
CHECKED BY	RH

WESTGATE CENTER
S.R. 104 & 100th AVE. WEST
EDMONDS, WASHINGTON

Olsen's

S-2 of 5

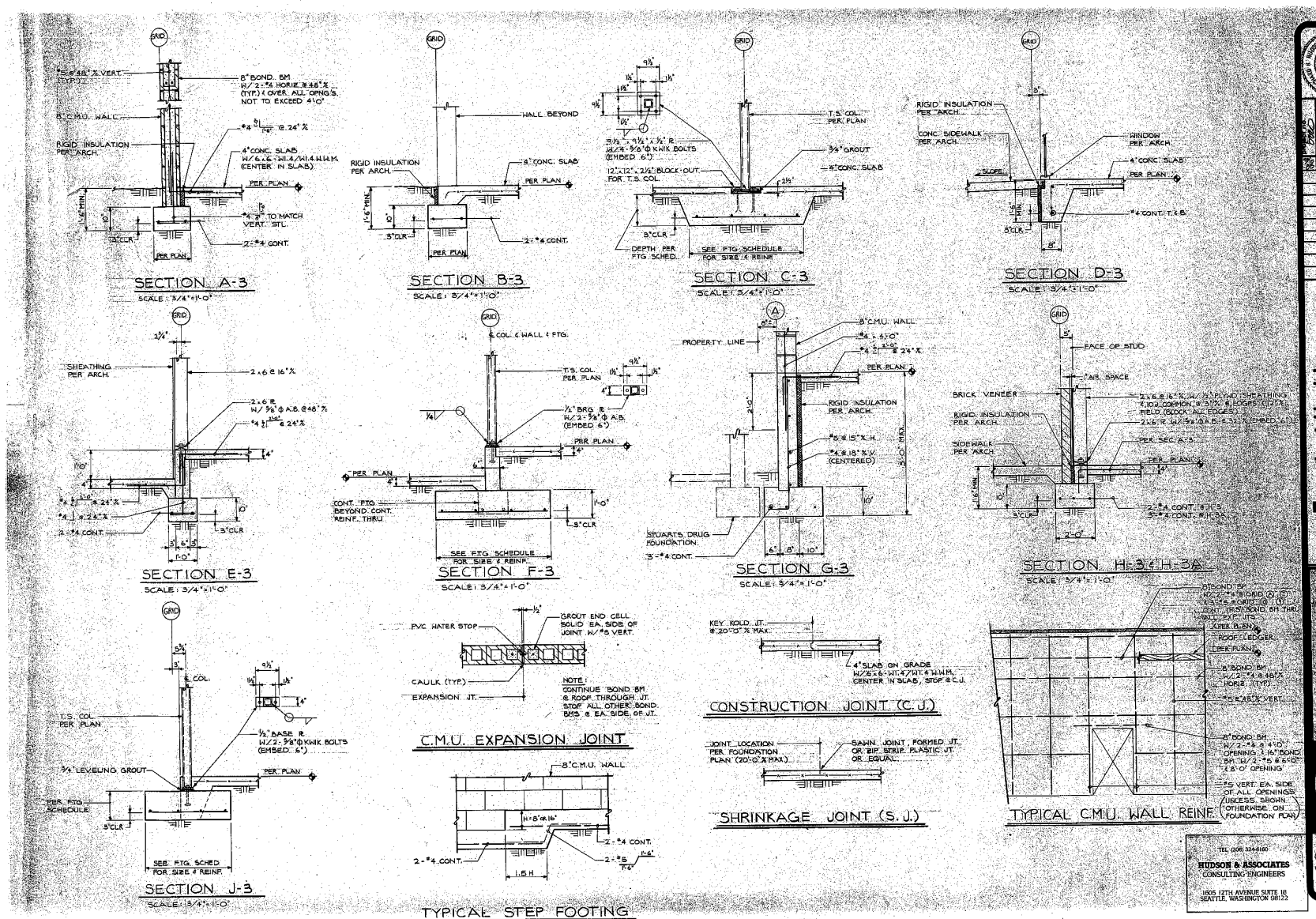

dk
david kehle, architect
1932 first ave. suite 302
seattle, washington 98101
(206) 624-8495

DATE	10-83
DRAWN BY	J.M.K.
CHECKED BY	R.K.
REV.	SHOP DWG.

SHOP

WESTGATE CENTER
S.R. 104 & 100th AVE. WEST
EDMONDS, WASHINGTON

Olson's

TEL (206) 324-8160
HUDSON & ASSOCIATES
CONSULTING ENGINEERS
1505 12TH AVENUE SUITE 18
SEATTLE, WASHINGTON 98122

S-3
5 OF 5

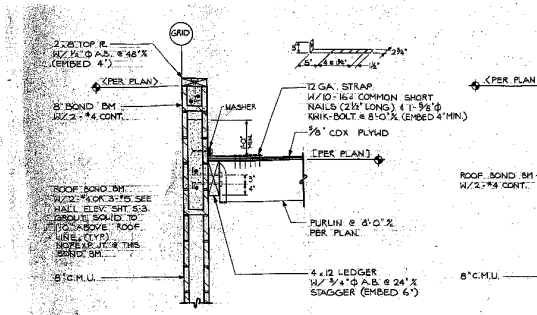

SECTION A-4
SCALE: 3/4" = 1'-0"

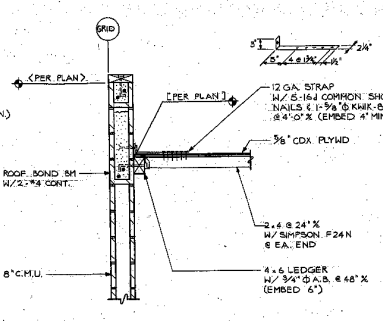

SECTION B-4
SCALE: 3/4" = 1'-0"

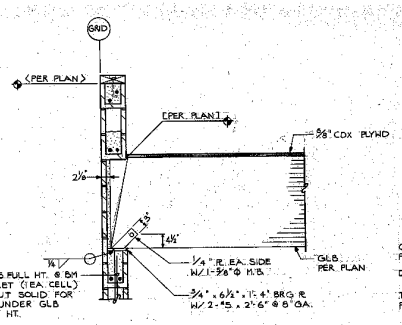

SECTION C-4
SCALE: 3/4" = 1'-0"

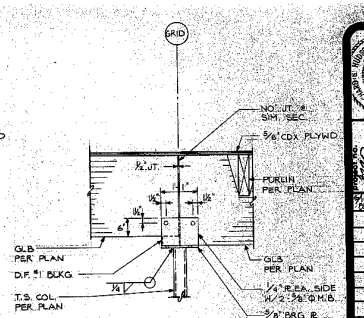

SECTION D-4
SCALE: 3/4" = 1'-0"

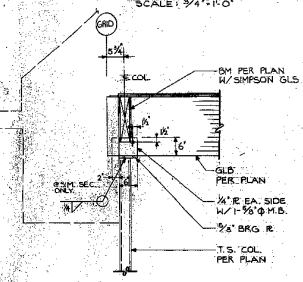

SECTION E-4
SCALE: 3/4" = 1'-0"

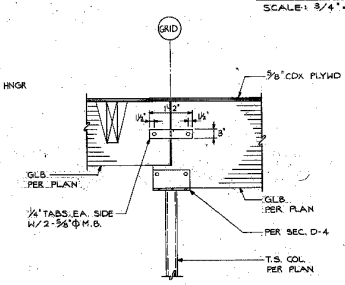

SECTION F-4
SCALE: 3/4" = 1'-0"

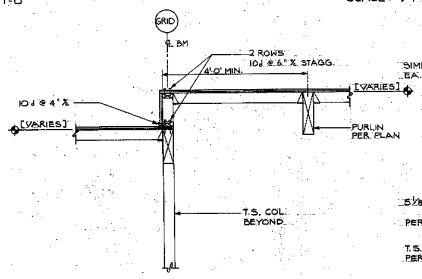

SECTION G-4
SCALE: 3/4" = 1'-0"

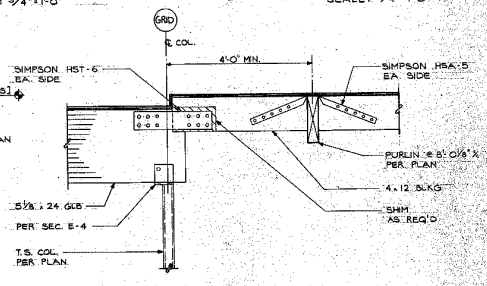

SECTION H-4
SCALE: 3/4" = 1'-0"

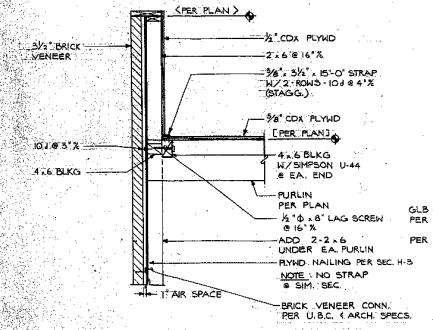

SECTION J-4
SCALE: 3/4" = 1'-0"

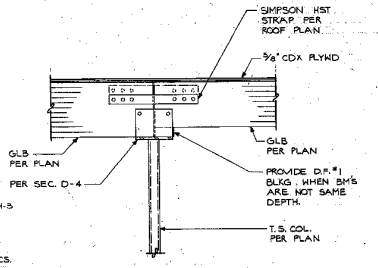

SECTION K-4
SCALE: 3/4" = 1'-0"

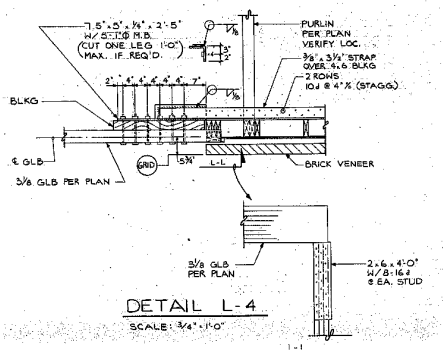

DETAIL L-4
SCALE: 3/4" = 1'-0"

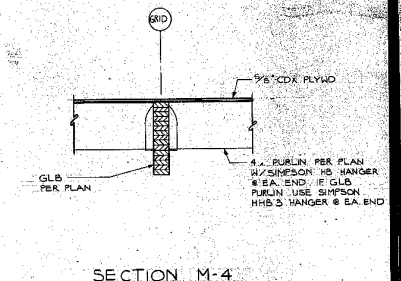

SECTION M-4
SCALE: 3/4" = 1'-0"

TEL (206) 324 6160
HUDSON & ASSOCIATES
CONSULTING ENGINEERS
1605 12TH AVENUE SUITE 18
SEATTLE, WASHINGTON 98122

dk
david kehle, architect
1932 first ave. suite 302
seattle, washington 98101
(206) 624-9495

1	10-10-83	ISSUED FOR PERMIT
0	8-10-83	ISSUED FOR BID
NO.	DATE	REVISIONS

DATE: 8-10-83
DRAWN BY: JMA
CHECKED BY: K.R.

WESTGATE CENTER
S.R. 104 & 100th AVE. WEST
EDMONDS, WASHINGTON

Olson's

S-4
5 OF 5

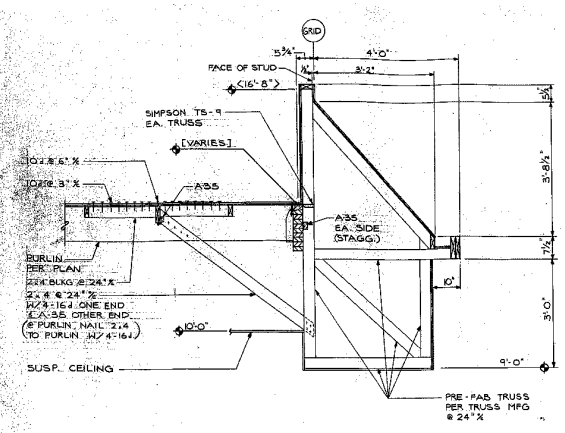

SECTION A-5
SCALE: 3/4"=1'-0"

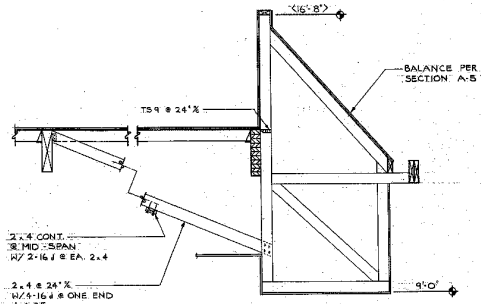

SECTION B-5
SCALE: 3/4"=1'-0"

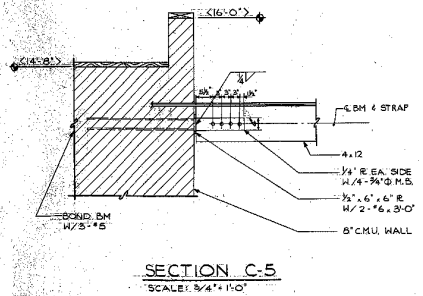
<16'-0">
<14'-8">
¼"
¾"
¾"
¾

S P E C I F I C A T I O N S
(Including Conditions of the Contract)

Conditions of the Contract

1. General Conditions
The American Institute of Architects Standard Form of General Conditions of the Contract for Construction, A.I.A. Document A201, latest edition shall form a part of these specifications with the same force and affect as if printed herein. A copy of these General Conditions, is available at the office of the Architect.

2. Supplementary Conditions

A. Conflicts
In case of conflict between these specifications and the General Conditions, the specifications shall govern.

B. Modifications of the General Conditions
Par. 4.4.1 Labor & Materials (add the following)
The General Contractor shall pay for all water, gas, heat, electricity, sewer, utilities until substantial completion of the building.

Par. 4.6 Taxes (add the following)
State Sales Tax will be paid by the General Contractor as a reimbursable expense.

Par. 4.7.1 Permits, Fees, Licenses (add the following)
The general plan check and building permit fees will be paid by the General Contractor. All other permits, fees and licenses shall be secured and paid by the contractors. General Contractor shall also secure and pay for building occupancy permit. Excluded are any acreage fees, assements or other land related charges.

Par. 4.33.3 Shop Drawings (add the following)
The Architect will not review any shop drawings which have not been stamped and signed by the contractors. For specific shop drawings requested, refer to each section.

Par 8.1.1 Time (add the following)
The work shall be commenced on the date defined in the Construction Contract and substantially completed as defined in the Construction Contract.

Par. 11.1 Insurance (add the following)
The contractor shall maintain adequate workmen's compensation and employer's liability insurance as decided by law, as well as comprehensive general liability insurance. Provide owner's name as an additional insured. Also, contractor shall purchase and maintain builders risk policy issued to contractor and owner. The contractor shall not commence work until such insurance is obtained and approved by the owner and the Architect.

Hold Harmless Clause: Work done on the premises or in conjunction with execution of this contract, shall be at the contractor's risk and the contractor shall assume any and all liability and defend and hold harmless the owner from any and all claims from any person arising out of the operations of this contract.

3. Special Conditions

A. Meeting of these Specifications
Contractor shall provide all items listed and perform all operations called for, all in accordance with Par. 4.4.1 of the General Conditions, A201, and as modified herein.

B. Itemized Schedule of Costs
Prepare a Complete Breakdown of the Contract sum and furnish to the Architect before the first monthly payment is applied for. Also provide full list of sub-contractors and major suppliers to the Architect.

C. Building Codes
All construction shall be in accordance with the 1979 Uniform Building Code and all other codes having jurisdiction over the work being performed.

D. Prior Use of Occupancy
The Owner has the right to use or occupy the Building or any part thereof or to use equipment installed under the contract, prior to final Acceptance. Such occupancy shall not constitute acceptance of the work. If Owner moves in, any damage due to move-in is not the General Contractors liability. Also, Owner shall, upon move-in and/or substantial completion, assume payment of all utilities.

E. Material Clean-up
All contractors shall remove from the premises all surplus material, equipment, and debris resulting from each division of the work as it is completed.

F. Guarantees
Without cost to the Owner, correct all defects and failures within one (1) year from date of substantial completion or longer per each manufacturers guarantee unless conditions are due to neglect or carelessness of the Owner.

G. Work By Owner (Refer Art.6 General Conditions)
The Owner reserves the right to perform work with his own forces or under separate contracts with full cooperation of the General Contractor and his sub-contractors.

DIVISION 1 GENERAL REQUIREMENTS

SECTION 1A SUMMARY OF WORK

1A-1 General Scope of Work
The work included in the contract consists of all labor and materials required to construct a wood frame, 1 story shops building, all in strict accordance with these specifications and drawings except items specifically noted or specified as not in contract (N.I.C.).

1A-2 Contracts
The work will be performed under a single contract with the General Contractor (Prime Contractor) with major sub-contractors as follows:
A. Plumbing Construction - Contractor design
B. Electrical - Contractor design
C. Htg./Vent./Air Conditioning - Contractor design

SECTION 1B TEMPORARY CONSTRUCTION FACILITIES

1. Field Drawings
The General Contractor shall keep the building permit set of drawings and specifications on the job site for use during construction.

2. Temporary Utilities
Contractor shall provide telephone, toilets, water, and electricity to be used throughout the construction. Furnish temporary heat including fuel and power, which the Contractor will pay for until substantial completion of the project. Permanent heating plant may be used for that purpose when completed at no cost to the Owner until move-in or substantial completion.

3. Barricades and Fences
Provide all fences, barricades and safeguards necessary for the protection of the public and as required by code regulations.

SECTION 1C MISC. REQUIREMENTS

1. Maintenance Instructions
The Contractor shall furnish to the Owner, all manuals for instructions of proper care of materials and equipment.

2. As-Built Drawings
The Contractor shall provide location drawings to the Owner, of all underground utilities and concealed work as installed on the project.

3. Cleaning
After substantial completion; the Contractor shall clean, dust and wax, etc. all interior finishes that require the same. Remove all construction debris and refuse from site.

SECTION 1D INSPECTION AND TESTS

1. The Contractor shall provide and pay for all inspection and tests as required by local authority. Notify Building Officials at least 24 hours in advance.

2. Tests will be made by a testing engineering firm or laboratory selected by the Architect. Costs of all tests shall be paid for by the Contractor.

3. The Contractor shall furnish all samples of materials required to the testing engineer or laboratory in timely manner. Copies of all test reports shall be furnished to Contractor, Engineer, City, Architect, and Owner.

DIVISION 2 SITE WORK

SECTION 2A EARTHWORK

1. General
Carefully maintain bench marks, monuments and other reference points. Remove inactive or abandoned utilities from within building lines. Plug or cap where indicated or directed. Remove from site all materials that is unsuitable for filling. Keep all footings and slabs dry and free from frost. (pump as req'd) The General Contractor shall be responsible for the field layout and control points required to construct all work.
General Contractor will do all cutting and/or compacting of fills and rough grading required to bring the entire project area to subgrade. This contractor to excavate to elevations necessary for work indicated. Leave bearings surface undisturbed, level and true. Notify Architect and Soils Engineer if suitable bearing is not encountered at elevations indicated.

2. In general,work is to proceed as follow:
a. remove and dispose of any rubble, debris, existing asphalt, concrete chunks, etc. as required.
b. strip all top soil, sod, vegetation in areas under building and parking area. dispose of same (some may be utilized in non-structural fill areas).
c. excavate all footing areas and verify compaction to 95% modified proctor.
d. provide structural fill under slab areas compacted to 95% modified proctor.
e. all fill must be installed in maximum 8" lifts, compacted to 95% modified proctor.

3. Testing
Certified Soils Engineer to take all compaction testing, do excavation observations and recommendations, and to pre-approve structural fill and to interpret settlement markers and will notify Contractor when pre-load can be removed.

SECTION 2B SITE DRAINAGE (See Drawings)

Furnish and install all site catch basins, manholes, area drains, horizontal lines, connections to downspouts and necessary connections as shown on Engineers drawings. All elevations will be set by the Contractor and approved by the Architect before installation. Included is perimeter footing drains (4"ø), etc.

SECTION 2C SITE IMPROVEMENTS

1. Asphalt Pavement - Furnish and install base course and finished asphalt paving as shown on site plan.

Base course shall be a minimum of 4" thick in parking areas of crushed rock Applied over finish subgrade. Finish asphalt shall be 2" asphalt Class "B" mix topping over base course in all areas. All work and materials shall conform to the Asphaltic Paving Associates of Washington D.C., Bulletin #3, revised. Verify site conditions with the Architect before starting.

2. Paint Striping - Parking stalls shall be marked with 4" wide painted striping (White) as shown on drawings.

3. Extruded Concrete Curbs shall be installed where shown set in continuous mastic.

4. Landscaping: Provide landscaping per site drawing.

5. Concrete Sidewalks: Contractor to provide and install broom finished 4" thick concrete sidewalks with 6x6, 1.4x1.4 wwm reinforcement.

6. Concrete Ramps: Contractor to provide and install concrete ramp with surface of broom finish with slope to drain.

DIVISION 3 CONCRETE

SECTION 3A CAST IN PLACE CONCRETE

1. Concrete Strengths:
f'c = 2500 psi exterior slabs, footings, floor slabs

2. Concrete Work: Refer to the structural notes for additional criteria, Contractor shall notify Architect and Building Inspector at least 48 hours prior to an intended pour. Where there is any question as to the quality of the concrete, in the structure, the Architect may require laboratory tests or other load tests for that portion of the structure in question.

Cement shall be Portland Cement conforming to ASTM C150. Aggregate shall conform to ASTM C33. Admixture shall be Master Builders Pozzolith. Curing compound shall be Sealtz. Water shall be potable and free from substances that may be deleterious to concrete or reinforcement. 6 mil polyethelene vapor barrier under entire building slab, lap at floor steps.

Ready-mix concrete shall be used exclusively, furnished by an established supplier. Concrete shall be conveyed and placed in a manner to insure no separation, segregation, or intrusion of foreign matter. All concrete shall be thoroughly compacted by means of mechanical vibrators. Concrete slabs shall be finished to produce a smooth hard surface tolerance not to exceed 1/8 inch in 10 ft. Curing compound shall be sprayed on using one gallon per 300 square feet of surface area.

3. Testing
All tests shall be performed as required by the Building Department. The Contractor shall provide and pay for concrete cylinders and testing. Submit copies of Tests Reports to the Architect and Building Department. Minimum testing; 3 cylinders per pour for footings and tilt-up walls and slabs.

4. Finishing
a. Floor:
Contractor to provide and install Jonco Hard N Seal on all floor areas, 1 coat, after floor has been completely swept clean and washed.

SECTION 3B CONCRETE REINFORCING STEEL

1. Steel Grades
a. slab dowels and welded bars - grade 40
b. all other reinforcing steel - garde 60 - ASTM A615-68

2. Steel General
Reinforcement shall be unpainted, uncoated, free from rust or loose scale. Place reinforcement accurately and secure rigidly. Tieing shall be done with 16 gauge annealed wire. Detail all steel in accordance with the "ACI Manual of Standard Practice of Detailing Reinforced Concrete Structures."

DIVISION 4 Masonry

1. General
Provide and install all masonry (CMU & Brick) as shown on drawings and as specified here. All work shall be done in a quality workman like manner in accordance with accepted industry standards and manufacturers recommendations. Build in all reinforcing, bolts, anchors, flashings, inserts, block outs, doors, conduits as necessary. Verify work included necessary for completed project. Fill solid around all penetrations, and solid grout door jambs and head.

2. Materials
a. CMU -
1). concrete masonry units conforming to ASTM C90, grade N block (f' = 1350 psi), sand and gravel. Size 8"x8"x16", broken faced (split face) and smooth faced, running bond.
2). reinforcing - vertical and horizontal reinforcing (see structural drawings)
3). mortar - type S, f'c = 1800 psi in 28 days ASTM C476 concave tooled joints
4). grout - f'c = 2000 psi @28 days ASTM C476
5). control joints - prefrowed, dur-o-wall rapid control joints wide flange
6). insulation - provide add alternate to fill all non-grouted c with zonolite water repellant masonry fill insulation

b. Brick Veneer
1). "MCA-411 Pile" as manufactured by Mutual Materials Co, or approved, 4"x12"x4" Size, conforming to ASTM C652-68S-SW as modified by ICBO #2730 for hollow brick grade 1, type 1, M6000, running bond
2). color to be olive brown
3). mortar - type S, f'c = 1800 psi, ASTM C476, color brown (submit samples)
4). veneer anchors - 14 ga. galvanized veneer anchors min. 3½" corrugated spaced at not greater than 24"o/c horizontal and not exceeding 2 sq.ft.
6). dampproofing: Thoroclear 777 clear silicone, mfg. by Standard Drywall Products. Apply 2 coats with 60-80 square feet per gallon.

3. All masonry shall be cleaned of excess mortar and prevented from efflorescence.

DIVISION 5 METALS (Structural and Misc.)

1. General
Submit complete shop drawings to the Architect and Building Department, prior to fabrication. Form steel to accurate sizes and shapes, with sharp lines and angles. Punch connections, grinding exposed welds smooth. Provide holes and connections for work of other trades. Detail for ample strength and stiffness, conceal wherever possible. Galvanizing shall be hot-dip zinc-coating, per ASTM A123, applied after fabrication but before installation. For additional information, refer to structural notes.

2. Grades of Metals
a. pipe and tube columns - - - - - - - conform to ASTM A500 Grade B (fy = 4600 psi)
b. miscellaneous steel - - - - - - - - conform to ASTM A-36 (fy = 3600 psi)
c. miscellaneous steel hangers - - - - Simpson
d. machine bolts - - - - - - - - - - conform to ASTM a-307

3. Miscellaneous Metal Specialities
a. posts: provide and install 4" diameter concrete filled posts as follows:
2 at transformer
2 at gas meter
2 at trash enclosure
and as shown on the site plan.

DIVISION 6 CARPENTRY

1. General
All materials to be stamped with grade and trademark, and protect from the weather. All wood framing in contact with concrete to be given heavy coat of wood perservatives. All framing material to be "Kiln Dried".

2. Framing
Stud wall to be 2x4 or 2x6 as indicated on drawings. All framing material to be "kiln Dried". Provide blocking as required by code and as required for all equipment and wall finishes. (Verify with Architect)

3. Rough Carpentry
Provide all rough carpentry, sheathing, furring, blocking, roof framing, mechanical unit supports, roof curbs, and similar work necessary to complete the project. Install all rough hardware and misc. items.

4. Materials (See structural)
2 x 4 roof joists - - - - - - - - - - - - - DF#2 (fb = 1450 psi)
2 x 6 studs - - - - - - - - - - - - - - - HF#2 (fb = 1000 psi)
4 x purlins - - - - - - - - - - - - - - - DF#2 (fb = 1450 psi)
4 x purlins - - - - - - - - - - - - - - - DF Select #1
Lumber not noted- - - - - - - - - - - - - DF#2 (fb = 1450 psi)

Plywood:
Exterior Wall Sheathing - - - - - - - - - ½" CDX (5 ply) 24/0 or 32/16
Exterior roof Sheathing - - - - - - - - - 5/8" CDX

All lumber grades shall conform to "WWA Grading Rules For Western Lumber - 1977 Edition. All plywood shall conform to U.S. Product Standard PS - 1-66

5. Glu-Laminated Beams
All G.L.B. to be fabricated by approved fabricators. Furnish AITC certificate. Use water-resistant case in type glue with mold inhibitor. Douglas-Fir West Coast species combination 24f. No field splicing will be permitted. Protect members during transit and installation. Provide shop drawings.

6. Exterior Finish Carpentry
a. The contractor shall provide and install lap tongue and grooved all heartwood, clear western red cedar with rough side out. Installation by blind nail per standard practice.
b. The contractor shall provide and install western red cedar, clear, Heartwood exterior trim with rough side out. See drawings for detailing.

7. Interior Finish Carpentry
The contractor shall provide and install the following materials as detailed per standard industry practices:
a. wood door frames, jambs, base boards, window sills, to be clear fir, s-dry, sds, kiln dried, verticle grain

8. Plastic Laminate
Contractor to provide and install 1/16" thick high pressure plastic laminate, solid colors as detailed for toilet walls as manufactured by Wilson Art, laminate or approved.

SECTION 7A INSULATION

Contractor to provide and install in the following areas all installed in accordance with manufacturers recommendations.

1. Exterior
a. exterior concrete walls at finished spaces, R-rigid
b. exterior stud walls (2x6) R-19 foil faced fiberglass batt
c. perimeter insulation - rigid R4.25 min.

2. Interior
a. surrounding toilet rooms - 3½" batt sound deadening - thermafibre.

3. Roof
a. Eaves: R-19 on top of ceiling, fiberglas batt with continous aluminum face foil on bottom.

SECTION 7B BUILT-UP ROOFING

1. Furnish and install smooth surface OC 315.W45 up to 6" per foot slope Class B bondable roofing system as manufactured by Owens-Corning or approved.

Felts:	O.C. 138 Perma Ply R	2 layers (verticle as well)
	O.C. 454 Cap Sheet	1 layer
Bitumen:	Type III and/or H	

15 year endorsement flashing on all areas as called for on drawings. J-M Asbestile Super "A". Application shall be in strict accordance with manufacturers recommendations, and shall be done by a roofing contractor approved by manufacturer.

2. Submittal
Roofing assembly breakdown should include particular manufacturers installation requirements regarding materials and methods of applying.
Submit to Architect prior to installation.

3. Roof Deck Acceptance
Do not start roofing until Architect or engineer has inspected displkyed ceiling. Roof deck must be dry and ready to receive roofing. Once roofing contractor accepts the deck, he is responsible for the performance of the roofing assembly.

Roofing contractor to inspect roof and make necessary corrections prior to starting the installation. Check roof slope and lay felts in direction required for drainage.

4. Guarantee
Roofing contractor to provide roofing guarantee for 5 years.

SECTION 7C CAULKING AND WATERPROOFING

The Contractor to provide and install the following per manufacturers recommendations:

1. Waterproofing
a. 15# building paper over sheathing under metal canopys and wood exterior siding and over plywood sheathing behind veneer masonry.
b. asphalt emulsion waterproofing where below grade occurs, or steel in contact with concrete and/or dirt and for separating dissimilar metals.

2. Caulking:
a. joints: foam baker rod sized to fill joint, silicone based caulking over baker rod compatible for painting.
b. window to wood etc. - - - - silicone based caulking paintable clear. All caulking to be premium grade, GE, Sicka, or approved.

SECTION 7D FLASHINGS AND BIRD SCREENS

All flashing shall extend above the level of the finished roof minimum 8" and shall be fabricated of pre-finished 24 gauge steel. Overflow scuppers shall be fabricated as above and located as shown on the drawings. Fabrication to be from field dimensions, install flashing over roof curbs and supports. Downspouts see plan for location, shall be either pre-finished steel or painted PVC.

SECTION 7E METAL ROOFING

Provide and install metal 24 gauge metal roofing as manufactured by Hommet or approved with 1" metal standing seams. Miter all standing seam joints and solder or otherwise make water tight all joints. Provide flashing as shown to match. Submit details to Architect for approval.

SECTION 7F ROOFING ACCESSORIES

1. Roof Scuttle and Ladder
Contractor to provide and install a Type S 2'-6" x 3'-0" roof scuttle with padlock and chain as manufactured by the Nilco Co.

Contractor to provide and install on all steel ladder to fit roof scuttle.

Contractor to submit shop drawings of both to Architect for approval.

2. Roof Drains
Contractor to provide and install J R Smith or Josam Series with Domed Strainer.

DIVISION 8 DOORS, WINDOWS, GLASS AND HARDWARE

SECTION 8A HOLLOW METAL

Contractor to furnish and install hollow metal doors and metal frames. Metal doors shall be manufactured by "Fenestra" or approved. Door panels shall be 18 gauge, 1-3/4" thick, 1/8" clearance at lip and sides, bevel on lock sides. Steel reinforcing at all points where hardware is to be installed. See drawings for swing of doors and windows.

Hollow metal frames shall be 16 gauge. All frames shall have three adjustable anchors at each jamb, and three silencers on latch side of jamb.

Shop Drawings: Provide shop drawings to the Architect prior to fabrication.

SECTION 8B STOREFRONT DOORS

Contractor to provide and install bronze aluminum door, center hung pivot with concealed overhead closer and interior aluminum stops and threshold. Push/Pull style as selected by Architect as manufactured by Kawneer or approved. Weatherstrip all surfaces.

SECTION 8C WOOD DOORS

Contractor to provide and install pre-hung birch veneer solid core (see schedule) doors, premium appearance grade, suitable for staining. As manufactured by Simpson or approved.

SECTION 8D FINISH HARDWARE

The Contractor to:
1. Provide all finish hardware for complete work, in accordance with drawings and specifications.

The Contractor shall be responsible for proper operation and fitting of hardware in locations specified. The Contractor shall adequately store all finish hardware until installation is made. Exposed surface of hardware shall be covered and well protected during installation, so as to avoid damage to finishes.

2. Upon being awarded the finish hardware contract, the Hardware Supplier shall immediately prepare and submit to the Architect, in triplicate a complete schedule of Finish Hardware required herein.

Manufacturers

Butts	-	McKinney
Locks	-	Sargent Series 6 line -RH Design
Stops	-	Ciper - wall 331, exterior doors 340X
Thresholds	-	Pemko
Cylinders	-	Adams Rite (furnish construction cores and replace at completion of project)
Closers	-	LCN Smoothee Series
Kick Plates	-	

david kehle architect
1520 116th Ave. NE, Suite 200
Bellevue, Washington 98004
(206) 624-8495

SPEC 1

Olsons

WESTGATE CENTER
S R 104 & 100th AVE. WEST
EDMONDS, WASHINGTON

Checked by
Drawn by
Scale
Date
Project No.
Bldg. Permit

No other hardware substitutions will be permitted unless approved by the Architect.

Keying
Replace construction cylinders with finish cylinders. Provide 2 keys for each lock. All locks to be Master-keyed and keyed different. (Keying schedule must be approved by the Owner and Architect.

Finish
Finish of all hardware shall be US 10B oil rubbed bronze (cylinder faces to match hardware).

Door Signs
Laminated plastic, brown and white, suede finish. 1 MEN, 1 WOMAN per toilet

Exit Signs and Extinguisher Signs
Plastic face, red and white

Hardware Types
Type 1 - Rear doors
1½ pr butts 4x4½ with non-removable pins
1 threshold
1 weatherstrip
1 lockset
Flush-bolts on inactive leaf - pairs only
1 stop

Type 3
1 padlock for roof hatch

Type 3 - Storefront
1 concealed closer by door mfg.
1 threshold by door mfg.
1 weatherstrip by door mfg.
1 cylinder with interior thumbturn
1 push/pull bar
Flush bolts inactive leaf

Type 4 - Interior toilet rooms (20 min. label)
1½ pr butts 4x4½
1 privacy lock
1 silencers
1 closer
1 wall mount door stop
1 threshold

SECTION 8E GLASS AND GLAZING

Furnish and install all glass and glazing as shown on drawings and as required to complete project as specified herein.

1. Materials:
   a. Storefront: exterior 1" insulated, ¼" clear
      Alt: price for outside bronze
   b. Storefront door: exterior - 1" insulated as above
   c. Manufactured by Libbey-Owens Ford Glass Co. or approved.
   d. Mirrors: ¼" electro-copper backed plate glass
      Attach with stainless steel clips. See interior elevations.

2. Tempering: provide tempered glass as required by code.

3. Clean-up: Clean excess putty or compound from glass and surrounding work and clean and polish all glass.

SECTION 8F ALUMINUM WINDOWS AND STOREFRONT

Provide and install Kawneer 1-3/4 x 4-1/2 medium bronze aluminum storefront type windows, fixed and operable, as shown on drawings. Submit shop drawings for approval.

DIVISION 9 FINISHES

SECTION 9A GYPSUM WALLBOARD

The Contractor is to furnish and install all gypsum wallboard as indicated on the drawings and as specified herein, in accordance with Standard Practices and as set forth in the "Architectural Specification Manual - painting wall covering and gypsum wallboard finishing".

1. Materials:
   a. Wallboard shall be 5/8" thick in areas. Waterproof behind plumbing fixtures, exterior grade in soffit and 5/8" UL one hour Type "A" at 2 hour walls, roof and toilet room walls.
2. Application:
   a. Board shall be applied using the double nailing method. Back block all edge joints. Provide caping bead at all edges where exposed or in contact with door frames and finish flush.
   b. Apply additional coats of spackle if necessary to establish a true plane. All finished work must be without waves or irregularities, and ready for painting.
   c. Metal edge and corner beads at all outside corners, etc. Finish flush with spackling.

SECTION 9B PAINTING

The Contractor is to furnish all labor and materials and equipment for the Painting and Finishing as indicated on the drawings and specifications all in accordance with the "Architectural Specifications Manual - painting, wall covering and gypsum wall board finishing".

Wall material shall be new and of highest quality as manufactured by Parker, Kelly Moore, Olympic Stain or approved.

Color selection will be furnished to the Contractor by the Architect. Final coat of paint for both exterior and interior shall not be applied until the colors have been approved by the Architect.

1. Painting - Exterior
   a. Metal doors, metal trim, flashing, downspouts, railings, roof equipment, HVAC etc:
      1 coat galvinized metal primer (or if aluminum - aluminum primer)
      2 coats industrial enamel
   b. Wood siding and finish trim: (Pre-stain first coat front and back)
      2 coats stain
2. Painting - Interior
   a. Gypsum drywall (see schedule for location)
      1 coat primer (tint to final color)
      2 coats flat latex
      (2 coats semi-gloss enamel in toilet room)
   b. Wood doors and trim, handrails:
      1 coat tannic acid stain (Pratt & Lambert)
      2 coats trim urethane varnish (1 gloss, 1 dull)
   c. Concrete masonry walls
      2 coats sealer (Barracade or approved)
      2 coats masonry paint
   d. Metal (columns, metal doors, inside exterior doors)
      1 coat galvanized metal primer
      2 coats industrial semi-gloss enamel

SECTION 9C VINYL ASBESTOS TILE (V.A.T.)

The Contractor to provide and install 1/8" Excelon V.A.T. as manufactured by Armstrong or approved. Color to be selected by Architect. Clean up and wax (2 coats)

SECTION 9D VINYL BASE

Base to be 4" high as manufactured by Burke, Cove for vat and sheet vinyl, straight at carpet.

SECTION 9E SHEET VINYL

The Contractor to provide and install sheet vinyl flooring, Solarion-no wax finish as manufactured by Armstrong or approved. Submit samples for selections. Coved base up 5".

SECTION 9F PLASTIC LAMINATE

The Contractor to provide and install plastic laminate on toilet room walls. Plastic laminate as manufactured by Wilson Art. Provide metal trims = necessary.

SECTION 9G SUSPENDED CEILING

The Contractor is to:

1. Provide and install 2'x4' suspended acoustical ceiling with 15" main and intermediate runners, exposed grid, with standard wall angles, etc. in flat white finish. Provide shop drawings of layout. Install with wires 4'-0" o.c. #9 wire. Provide additional wires at mechanical and electrical fixtures and designed for seismic bracing. All hangers must be secured to roof purlins - not stiffners.

2. Acoustical tile to be Armstrong mineral fiber Cortega design tile 24"x48"x5/8" square edged. Alt: Fairlock 2'x2' Regular
   Provide minimum 10 minute seperation.

DIVISION 10 SPECIALTIES

SECTION 10A TOILET ROOM ACCESSORIES - ALL TOILET ROOMS

All accessories as manufactured by McKinney or approved, finish to be stainless steel. Towel dispensers must take a C-fold towel. Provide the following:

1. Paper towel - 610 - 1 per toilet room
2. Roll paper holder - - - - - - - - - - - - - - - -1530 B - 1 per toilet
3. Soap dispenser- - - - - - - - - - - - - - - - - - 304 B
4. Waste basket - Vinyl- - - - - - - - - - - - - - - - - - - 1 per room
5. Grab bars 1½" - 1 per handicap toilet (2)
6. Coat hook -1048 B - 1 per room on door

DIVISION 15 MECHANICAL - CONTRACTOR DESIGN

1. General Requirements
   The intent of this design criteria is to define in general the scope and standards of work for the design and construction of the Mechanical requirements outlined in these specifications.

   The design-build Contractor shall use the criteria in these specifications to establish his proposal. Each proposal shall be accompanied with general design (red marked) drawings to clarify his proposal and shall include one or all of the following (include expansion potential in design):

   A. Plumbing
   B. Heating and Air Condition
   C. Ventilation

   The design-build Contractor shall indicate as part of his proposal, the names of equipment as specified that he intends to use as follows:

   A. Plumbing
      1. Water heaters
      2. Fixtures and faucets
   B. Heating and Air Conditioning
      1. Roof mounted units-electric or approved.
   C. Ventilation
      1. Toilet exhaust fans
      2. Roof attic ventilation
2. Scope
   The requirements of the "Conditions of the Contract" and of Div. 1 of these specifications apply to all work of this Division.
3. Design Service
   The design-build contractor, shall provide a set of drawings satisfactory to obtain all necessary permits, required by Code. The system shall be designed for the primary functions of the offices and warehouse involved.
4. Work Included
   The work included shall consist of but not be limited to the furnishing of all equipment, design, labor, materials and other equipment necessary to execute the Mechanical requirements described in the drawings and specifications.

   This contractor is to arrange and pay for all fees, permits, and inspections required for the work of this Division.

   All work and materials shall be in full accordance with applicable State and local Codes and Regulations.

   Avoid cutting any Structural Building members or undermining any building footings.

   All materials and equipment shall be installed as recommended by the manufacturers.
5. Utilities
   All utilities shall be installed and including final connections to all equipment. This contractor to verify adequate utility sizes for factors involved. Connect sanitary to existing main line in north easement road. Water connect to existing street main.
6. The General Contractor and the Design-Build Contractor shall guarantee work of this Division free from defects of workmanship and materials for a period of 1 year from Substantial Completion of the work. Remedy the system of any defects developing during this period, free of charge. Length of Equipment Guarantee is indicated by the Mfg. HVAC warranty is valid only upon evidence of a maintenance agreement being in force.
7. Shop Drawings
   The Design-build Contractor shall furnish shop drawings, catalog data, and drawings to the Architect for approval prior to ordering the items.
8. Cleaning
   Pipes, ducts, fixtures, and equipment shall be clean before installation is accepted.
9. Operating and Maintenance Instructions
   Furnish 3 sets of operating and maintenance instructions in binders for all equipment and devices requiring maintenance or adjustment. Instruct Owners personnel in proper operation of equipment.
10. As-Built Drawings
    The Design-build Contractor shall make a record set of all utility lines, tees, and all items buried below slab. Complete and give to the Architect at completion of project.
11. General Design
    A. Plumbing:
       1. Waste: to be cast-iron or plastic under slabs and minimum 5' to outside of building. Clean-outs to be flush floor with bronze cover or wall with cover.
       2. Supply: all piping to be copper, type L above ground, type K below ground, solder joints. Insulate hot water lines above slab, pre-molded glass-fiber insulation 3/4" thick (kink waste also).
       3. Plumbing Fixtures:
          a. Water heater - locate in above each set of restrooms, A.O Smith, 20 gal. electric with jacket insulation.
          b. Lavatories - wall mounted white
          c. Toilets - with seat (open front) white
          d. Mop Sinks - fiberglass (4)
          e. Faucets - Single control lever, Moen
          f. Roof Drains: see roof accessories - J.R. Smith
    B. Heating/Cooling
       1. Provide standard ASHRAE rated conditions for all areas.
       2. Equipment -
          a. Office: Carrier or GE on isolators. Verify locations and weight on roof with Architect and General Contractor. System is to be a multi-units heat pumps system with diffusers and electric supplemental heat.
       3. Duct system - rectangular metal insulated or duct board to provide adequate supply air distribution. All ducts to be internally lined with 1" high density insulation, attached with glue and rivets.
       4. Temperatures:
          a. Heating - maintain 70°F dry bulb indoor temp @ 24°F outside.
          b. Cooling - maintain 78°F dry bulb indoor @ 65°F wet bulb temperature outside.
          c. Air Changes - as required by code.
       5. Calculations - The design-build contractor shall submit the following to the Architect:
          a. Heating and cooling loads
          b. CFM at diffuser locations
       6. Thermostats - automatic changeover with locking covers and night setbacks for the systems.
    C. Ventilation
       1. Toilet rooms - as required by code - operate with light switch
       2. Roof Attic Ventilation: Provide attic ventilation to provide cross ventilation. Minimum venting is 1/150 net free area per the area vented.

DIVISION 16 ELECTRICAL - CONTRACTOR DESIGN

1. General Requirements
   The intent of this design criteria is to define in general the scope and standards of work for the design and construction of the Electrical requirements outlined in these specifications.

   The design-build Contractor shall use the criteria in these specifications to establish his proposal. Each proposal shall be accompanied with the general design (red marked) drawings to clarify his proposal and shall include the following: (include expansion potential in the design)

   A. Panel and circuit diagrams
   B. Load analysis (including electric heat)
   C. Fixture cuts

   The design-build contractor shall indicate as part of his proposal, the names of equipment as specified that he intended to use as follows:

   A. Main switchboard
   B. Distribution panels
   C. Electrical heaters
   D. Devices and special systems
2. Scope
   The requirements of the "Conditions of the Contract" and Division 1 of these specifications apply to all work of this Division.
3. Design Service
   The design-build contractor shall provide a set of drawings satisfactory to obtain all necessary permits required by Code. The system shall be designed for the primary functions of the offices involved.
4. Work Included
   The work included shall consist of but not be limited to the furnishing of all equipment design, labor, materials, and other equipment necessary to execute the Electrical requirements described in the drawings and specifications.

   The design-build contractor shall arrange and pay for all fees, permits, and inspections required for the work of this division.

   All work and materials shall be in full accordance with applicable state and local codes and regulations.

   Avoid cutting any structural Building members or undermining any Building footings.

   All materials and equipment shall be installed as recommended by the manufacturer.
5. Utilities
   All utilities shall be installed and including final connections to all equipment and to all utility services outside of the building line as required by Code. This contractor shall verify location of service, and to verify adequate utility size.
6. Guarantee
   The General Contractor and the Design-Build Contractor shall guarantee work of the Division free from defects or workmanship and materials for a period of 1 year from Substantial Completion of the work and shall remedy the system of any defects developing during this period free of charge. Length of Equipment Guarantee as indicated by the manufacturer.
7. Shop Drawings
   The Design-build Contractor shall furnish shop drawings catalog data, and drawings to the Architect for approval prior to ordering the items.
8. Cleaning
   All fixtures and equipment shall be clean before installation is accepted.
9. Operating and Maintenance Instructions
   Furnish 3 sets of operating and maintenance instructions in binders for all equipment and devices requiring maintenance or adjustment. Instruct Owners personnel in proper operation of equipment.
10. As-Built Drawings
    The Design-build Contractor shall make an exact record of all utility services buried below slab. Complete and give to the Architect at completion of the project.
11. General Design
    A. Main service - 800 amp, 120/-208V, 3 phase required. Panelboards to be sized for 25% additional future circuit breakers. Switch gear to be GE, Crouse-Hinds or approved.
    B. Provide separate 100 amp distribution panels in each possible tenant area. Conduit only.
    C. Transformers - provide as required for main service (ground mounted) and for step down, voltage changes etc.
    D. Power and Lighting distribution - conceal all conduit within the wall framing and above ceilings with all copper wire.
    E. Receptacles - Bryan, ivory with device plate (ground type) Minimum in larger spaces, 10' o.c.
    F. Night and Exit Light system - separately circuited systems for night light. Locate as required by Code. Provide and install emergency battery operated light fixtures (wall mounted)
    G. Fixtures:
       1. Shops: 2'x4' lay-in fluorescent 4 tube with acrylic lens, 85 foot candles - Lithonia
          150 watt flood, recessed black baffle, white trim - Marco
       2. Restrooms: Gyp Bd. Ceilings - 4', 2 tube acrylic wrap around lens.
       3. Outside: Canopy - recessed white trim
          Loading area - wall mounted "shoe box" style, 150 watt, direct cut-off, bronze enameled, Stonco

       All outside lighting control by photo cell and time clock

       4. Fluorescent bulbs to be "watt-miser" type with "watt-miser" ballasts.
    H. Electric Heat - provide strip heaters as required in toilet rooms with individual thermostats.
    I. Heating, Ventilating, and Air Condition Equipment this contractor to make final connections to all heating, ventilating and air conditioning equipment as required. Verify load requirements with Mechanical Contractors.
    J. Telephone System - this contractor to provide and install plywood backboard, conduit and wall boxes as required by Telephone Co. to complete system.
    K. Exhaust fans - this contractor to make final connections to exhaust fans.
    L. Switching - provide "quiet" mercury switch, Bryant, each shop with 1 switch.
    M. Special - coordinate with owner supplied security system for any electrical requirements (ADT) conduits only.
    N. Door call system - contractor to provide low voltage call system at each man doors with bells. conduits only.
    O. Provide conduit for site lighting and signage. Verify

david kehle architect
1822 EAST MAIN AVENUE
seattle, washington 98101
(206) 624-9495

SPEC 2

Olsons

WESTGATE CENTER
SR 104 & 100th AVE WEST
EDMONDS, WASHINGTON

1	2-11-75	ADDED SPECS
2	2-19-75	ADDED SPECS
3	3-5-75	ADDED SPECS

drawn by
checked by
date
project

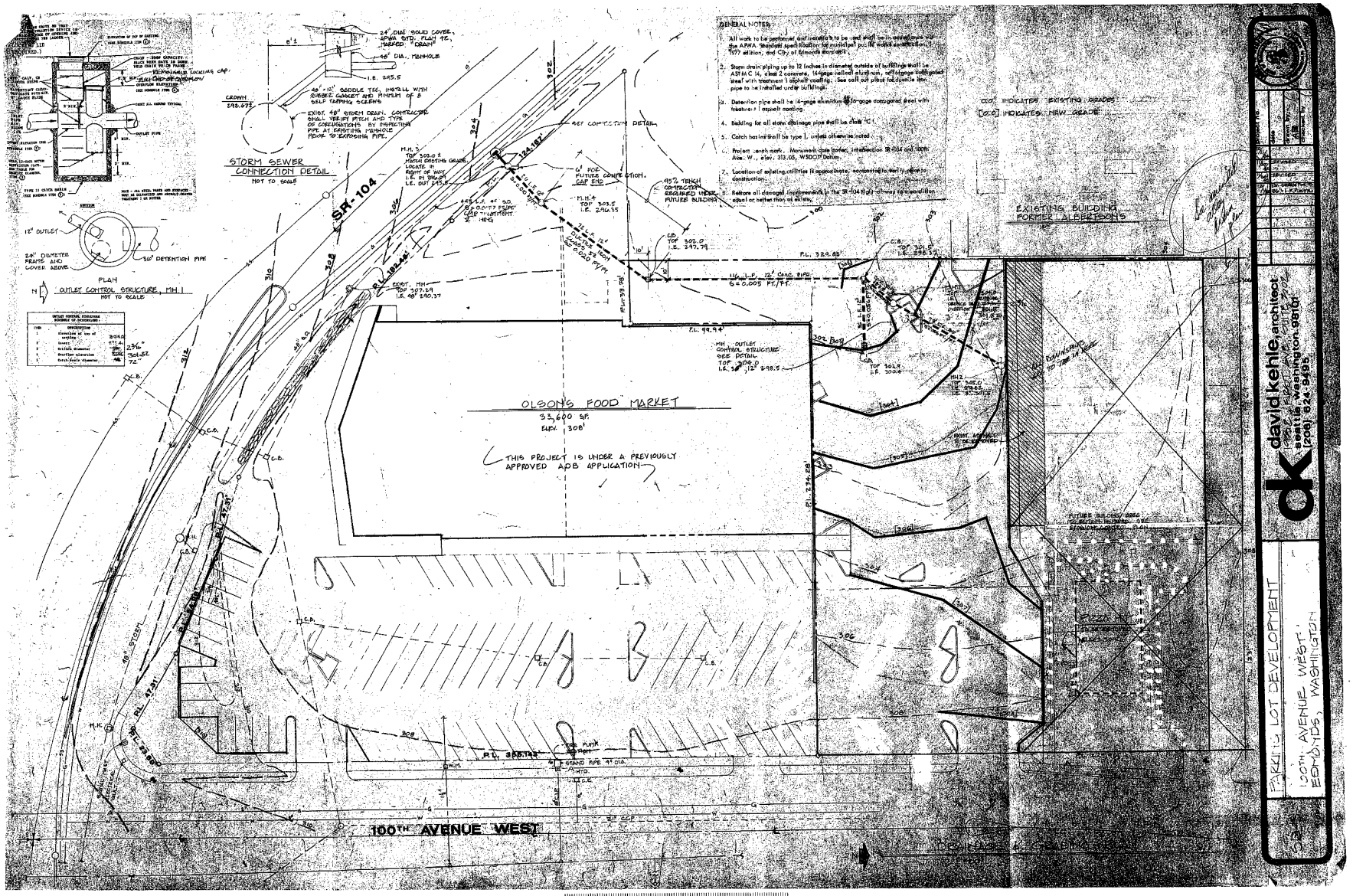
GENERAL NOTES
1. All work to be performed and materials to be used shall be in accordance with the APWA "Standard Specifications for municipal public works construction", 1977 edition, and City of Edmonds standards.
2. Storm drain piping up to 12 inches in diameter outside of buildings shall be ASTM C 14, class 2 concrete, 16-gage helical aluminum, soil-gage corrugated steel with treatment 1 asphalt coating. See cell cut plans for ductile iron pipe to be installed under buildings.
3. Detention pipe shall be 14-gage aluminum or 16-gage corrugated steel with treatment 1 asphalt coating.
4. Bedding for all storm drainage pipe shall be class "C".
5. Catch basins shall be type 1, unless otherwise noted.
6. Project wash work. Monument case corner, intersection SR-104 and 100th Ave. W., elev. 313.05, WSDOT Datum.
7. Location of existing utilities is approximate, contractor to verify prior to construction.
8. Restore all damaged improvements in the SR-104 R/W allowed to remain in kind or better than as exists.
(0.0) INDICATES EXISTING GRADES
[0.0] INDICATES NEW GRADE
STORM SEWER CONNECTION DETAIL
NOT TO SCALE
24" DIAL SOLID COVER, APWA STD. PLAN 12, LABELED "DRAIN"
48" DIA. MANHOLES
48" x 12" SADDLE TEE, INSTALL WITH RUBBER GASKET AND MINIMUM OF 8 SELF TAPPING SCREWS
EXIST. 48" STORM DRAIN. CONTRACTOR SHALL VERIFY PITCH AND TYPE OF CONNECTIONS BY INSPECTION PIPE AT EXISTING MANHOLE PRIOR TO EXTENDING PIPE.
CROWN 312.07±
I.E. 305.5
SR-104
M.H. 3
TOP 303.0 ±
MATCH EXISTING GRADE
LOCATE IN RIGHT OF WAY
I.E. IN 300.0±
I.E. OUT 297.0±
NET CONNECTION DETAIL
6" PVC FUTURE CONNECTION. CAP END
M.H. 4
TOP 303.5
I.E. 290.35
95% TRENCH COMPACTION REQUIRED UNDER FUTURE BUILDING
EXIST. MH
TOP 307.34
I.E. 48" 290.37
P.L. 324.85'
EXISTING BUILDING
FORMER ALBERTSON'S
OLSON'S FOOD MARKET
33,600 SF.
EUV. 308'
THIS PROJECT IS UNDER A PREVIOUSLY APPROVED ADB APPLICATION
MH. OUTLET CONTROL STRUCTURE SEE DETAIL
TOP 304.0
I.E. 48" 12" 298.5
PIZZA HUT
P.L. 324.25'
P.L. 385.143
100TH AVENUE WEST
OUTLET CONTROL STRUCTURE, MH. 1
NOT TO SCALE
PLAN
12" OUTLET
24" DIAMETER FRAME AND COVER ABOVE
36" DETENTION PIPE
OUTLET CONTROL STRUCTURE
(SEE DETAIL)
ITEM DESCRIPTION
1 Elevation of top of weir 304.0
2 Length 27'-4"
3 Orifice diameter 2 3/4"
4 Orifice elevation 301.52
5 Weir/Orifice diameter 72"
NOTE - ALL STEEL PARTS ARE GALVANIZED AND BITUMINOUS COATED TREATMENT 1 AS NOTED
PARKING LOT DEVELOPMENT
100TH AVENUE WEST
EDMONDS, WASHINGTON
david kehle, architect
AIA
seattle, washington 98101
(206) 624-8495
DATE
REVISIONS
SHEET NO.

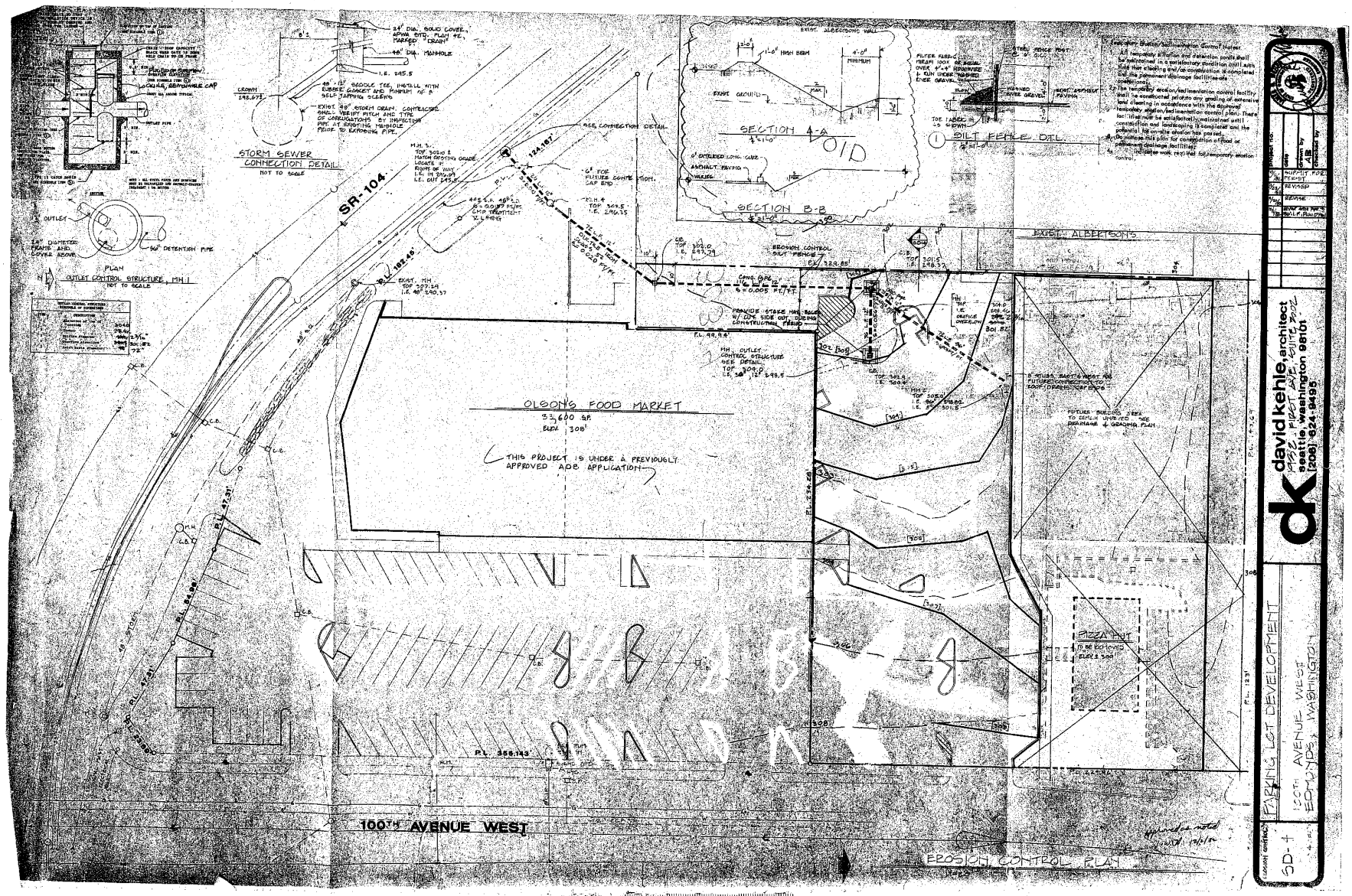
STORM SEWER CONNECTION DETAIL
NOT TO SCALE
OUTLET CONTROL STRUCTURE, MH 1
NOT TO SCALE
SR-104
OLSON'S FOOD MARKET
33,600 SF
EUDI 308'
THIS PROJECT IS UNDER A PREVIOUSLY APPROVED ADP APPLICATION
100TH AVENUE WEST
SECTION A-A
SECTION B-B
SILT FENCE DTL
EXIST. ALBERTSON'S
PIZZA HUT
EROSION CONTROL PLAN
PARKING LOT DEVELOPMENT
100TH AVENUE WEST
BOTHELL, WASHINGTON
SD-4
david kehle, architect
seattle, washington 98101
(206) 624-8495