GENERAL NOTES

A. REFER TO BASIC BUILDING SPECIFICATIONS, REQUIREMENTS AND STANDARDS FOR EXISTING SHELL AND CORE CONSTRUCTION. ALL WORK IS TO BE COMPATIBLE WITH EXISTING CONSTRUCTION.

B. ALL WORK SHALL BE PERFORMED IN STRICT ACCORDANCE WITH ALL GOVERNING BUILDING CODES AND REGULATIONS. THE CONTRACTOR SHALL BE RESPONSIBLE FOR ALL WORK THAT HAS BEEN PERFORMED WHICH DOES NOT MEET THESE CODES AND REGULATIONS.

C. ALL WORK SHALL BE PERFORMED IN STRICT ACCORDANCE TO THE ARCHITECT'S CONSTRUCTION DOCUMENTS. THE CONTRACTOR IS RESPONSIBLE FOR REPORTING IMMEDIATELY TO THE ARCHITECT ANY DISCREPANCIES OR DETAILS WHICH DO NOT MEET BUILDING CODES AND CONSTRUCTION STANDARDS.

D. THE CONTRACTOR SHALL VERIFY ALL CONDITIONS AND DIMENSIONS ON SITE PRIOR TO THE COMMENCEMENT OF CONSTRUCTION. IN THE EVENT OF CONFLICTS OR CHANGES BETWEEN DETAILS, OR BETWEEN THE PLANS AND SPECIFICATIONS, THE ARCHITECT SHALL BE NOTIFIED IMMEDIATELY.

E. THE CONTRACTOR SHALL VERIFY LOCATION OF ALL UTILITIES AND PIPING BEFORE BEGINNING WORK.

F. THE GC SHALL COORDINATE ALL OPERATIONS WITH THE OWNER, INCLUDING AREA FOR WORK, MATERIALS STORAGE, AND ACCESS TO AND FROM THE WORK, SPECIAL CONDITIONS OR NOISY WORK, TIMING OF WORK AND INTERRUPTION OF MECHANICAL AND ELECTRICAL SERVICES, NOISY OR DISRUPTIVE WORK SHALL BE SCHEDULED AT LEAST ONE (1) WEEK IN ADVANCE OF THE TIME WORK IS TO COMMENCE.

G. ALL WORK SHALL BE PERFORMED IN ACCORDANCE WITH THE HIGHEST STANDARD OF WORKMANSHIP IN GENERAL AND WITH SUCH STANDARDS AS ARE SPECIFIED.

H. GC SHALL SUBMIT SAMPLES OF ALL FINISHES OF SUCH SIZE AND NUMBER THAT THEY REPRESENT A REASONABLE DISTRIBUTION OF COLOR RANGES AND PATTERN PRIOR TO INSTALLATION FOR ARCHITECT'S APPROVAL. GC SHALL PROVIDE SHOP DWGS AND PRODUCT DATA FOR ARCHITECT'S APPROVAL ON ALL SPECIAL ITEMS REQUIRING CUSTOM FABRICATION (SHALL INCLUDE RATED FIRE DOORS AND HARDWARE).

I. ALL MATERIALS INDICATED TO MATCH EXISTING SHALL DO SO WITH RESPECT TO SIZE, SHAPE, COLOR, TEXTURE, PATTERN, QUALITY AND METHOD OF INSTALLATION INSOFAR AS PRACTICABLE AND SHALL BE APPROVED BY THE ARCHITECT BEFORE USE.

J. THE FLOORS MAY BE OCCUPIED DURING CONSTRUCTION. THE GC SHALL PROTECT ALL PERSONNEL, PASSERSBY OR VISITORS TO THE SITE FROM HARM AND INJURY. BARRIERS SHALL BE INSTALLED AS REQUIRED TO PROTECT EQUIPMENT INSTALLED DURING CONSTRUCTION, CAREFULLY MAINTAIN AND PROTECT MONUMENTS, BENCH MARKS AND THEIR REFERENCE POINT FROM BEING DESTROYED OR DISTURBED; REPLACE AS REQUIRED.

K. EXISTING WORK DAMAGED AS A RESULT OF WORK DONE UNDER THIS CONTRACT SHALL BE REPAIRED TO ORIGINAL CONDITION AND FINISHED TO MATCH ADJACENT FINISHES, SUBJECT TO ARCHITECT'S APPROVAL, AND AT NO ADDITIONAL COST TO THE OWNER. ALL REPLACEMENT MATERIALS REQUIRED TO MATCH EXISTING MATERIALS SHALL DO SO WITH RESPECT TO TYPE, PATTERN, TEXTURE, SIZE, SHAPE, COLOR AND METHOD OF INSTALLATION INSOFAR AS PRACTICABLE, AND SHALL BE APPROVED BY THE ARCHITECT AND OWNER PRIOR TO INSTALLATION.

L. MATERIALS, ARTICLES, DEVICES AND PRODUCTS ARE SPECIFIED IN THE DOCUMENTS BY LISTING ACCEPTABLE MANUFACTURERS OR PRODUCTS, BY REQUIRING COMPLIANCE WITH REFERENCED STANDARDS, OR BY PERFORMANCE SPECIFICATIONS. FOR ITEMS SPECIFIED BY NAME, SELECT ANY PRODUCT NAMED. FOR THOSE SPECIFIED BY REFERENCE STANDARDS OR BY PERFORMANCE SPECIFICATIONS SELECT ANY PRODUCT MEETING OR EXCEEDING SPECIFIED CRITERIA. FOR APPROVAL OF AN ITEM NOT SPECIFIED, SUBMIT REQUIRED SUBMITTALS, PROVIDING COMPLETE BACK-UP INFORMATION FOR PURPOSES OF EVALUATION. WHERE BUILDING STANDARD ITEMS ARE CALLED FOR, NO SUBSTITUTE WILL BE ACCEPTED.

M. INSTALLATION OF MECHANICAL, ELECTRICAL AND STRUCTURAL SYSTEMS WILL REQUIRE OPENING OF SOME EXISTING WALLS, CEILINGS OR FLOOR CAVITIES. THE GC SHALL BE RESPONSIBLE FOR THE REPAIR OF THESE OPENINGS TO MATCH EXISTING, EXCEPT WHERE NOTED OTHERWISE, FILL ALL HOLES AND VOIDS IN FLOORS WALLS AND CEILINGS WHICH RESULT FROM INSTALLATION OF WORK, AND REMOVAL OF EXISTING MATERIALS AND EQUIPMENT REQUIRED BY THIS CONTRACT. PATCHED AREAS SHALL MATCH THE MATERIALS, FINISHES, AND LEVELS ADJACENT, OR SHALL BE PUT IN THE PROPER CONDITION TO RECEIVE THE FINISH INDICATED.

N. OPENINGS REQUIRED FOR NEW WORK THAT PENETRATES EXISTING STRUCTURE SHALL BE COORDINATED WITH OWNER PRIOR TO COMMENCING THE WORK. ANY OPENING OVER 2" IN DIAMETER SHALL BE REVIEWED AND APPROVED BY OWNER. THROUGH CONCRETE SLABS OR WALLS, OR MASONRY WALLS, ALL ROUND HOLES SHALL BE CORE DRILLED WITH A DIAMOND DRILL AND ALL RECTANGULAR OPENINGS SHALL BE CUT WITH A DIAMOND SAW. IN NO CASE SHALL ANY STRUCTURAL MEMBER BE CUT. USE CARBIDE-TIPPED DRILLS FOR GYPSUM WALLBOARD PARTITIONS. KEEP OVER CUTTING TO A MIN.. MAINTAIN CONTINUITY AND INTEGRITY OF FIRE SEPARATION AT ALL TIMES. GROUT AROUND CONDUITS PASSING THROUGH CONCRETE WALLS AND FLOORS AND MASONRY WALLS. MAKE PATCHES WITH NEAT, TRIMMED EDGES: MATCH ADJACENT EXISTING WORK,

DEFERRED SUBMITTALS

MECHANICAL:
1. THE MECHANICAL WORK FOR THE PROJECT SHALL BE PERFORMED AS DESIGN-BUILD. THE GENERAL CONTRACTOR SHALL SUBMIT WITH THE BID A PROPOSED HVAC AND PLUMBING DRAWING THAT COORDINATES WITH THE ARCHITECTURAL DRAWINGS.
2. THE GENERAL CONTRACTOR'S MECHANICAL SUBCONTRACTOR WILL BE RESPONSIBLE FOR APPLYING FOR AND SECURING ALL NECESSARY MECHANICAL PERMITS.
3. THE GENERAL CONTRACTOR'S PLUMBING SUBCONTRACTOR WILL BE RESPONSIBLE FOR APPLYING FOR AND SECURING ALL NECESSARY PLUMBING PERMITS.

ELECTRICAL:
1. THE ELECTRICAL WORK FOR THE PROJECT SHALL BE PERFORMED AS DESIGN-BUILD. THE GENERAL CONTRACTOR SHALL SUBMIT WITH THE BID A PROPOSED ELECTRICAL DRAWING THAT COORDINATES WITH THE ARCHITECTURAL DRAWINGS.
2. THE GENERAL CONTRACTOR'S ELECTRICAL SUBCONTRACTOR WILL BE RESPONSIBLE FOR APPLYING FOR AND SECURING ALL NECESSARY ELECTRICAL PERMITS.

FIRE PROTECTION/FIRE ALARM:
1. THE FIRE PROTECTION WORK FOR THE PROJECT SHALL BE PERFORMED AS DESIGN-BUILD. THE GENERAL CONTRACTOR SHALL SUBMIT WITH THE BID A PROPOSED FIRE PROTECTION DRAWING THAT COORDINATES WITH THE ARCHITECTURAL DRAWINGS.
2. THE GENERAL CONTRACTOR'S FIRE PROTECTION SUBCONTRACTOR WILL BE RESPONSIBLE FOR APPLYING FOR AND SECURING ALL NECESSARY FIRE PROTECTION PERMITS.

DOCUMENTS FOR DEFERRED SUBMITTAL ITEMS SHALL BE SUBMITTED TO THE REGISTERED DESIGN PROFESSIONAL IN RESPONSIBLE CHARGE WHO SHALL REVIEW THEM AND FORWARD THEM TO THE BUILDING OFFICIAL WITH A NOTATION INDICATING THAT THE DEFERRED SUBMITTAL DOCUMENTS HAVE BEEN REVIEWED AND BEEN FOUND TO BE IN GENERAL CONFORMANCE TO THE DESIGN OF THE BUILDING. THE DEFERRED SUBMITTAL ITEMS SHALL NOT BE INSTALLED UNTIL THE DESIGN AND SUBMITTAL DOCUMENTS HAVE BEEN APPROVED BY THE BUILDING OFFICIAL.

DEFERRED SUBMITTAL FOR:
- Aluminum Canopy
- Anchorage design for merchandise racks.

Obtain Electrical Permit from State Labor & Industries

"Nothing in this permit approval process shall be interpreted as allowing or permitting the maintenance of any currently existing illegal, nonconforming or unpermitted building, structure or site condition which is outside the scope of the permit application, regardless of whether such building, structure or condition is shown on the site plan or drawing. Such building, structure or condition may be the subject of a separate enforcement action."

BARTELL DRUGS

Washington's Own Drugstores®

EDMONDS #58

TENANT IMPROVEMENT

23028 100TH AVENUE WEST

EDMONDS, WASHINGTON 98020

City of Edmonds Building Department
APPROVED PLAN

VICINITY MAP

PROJECT LOCATION

SITE DATA

SITE AND PARKING DATA:

LEGAL DESCRIPTION:
SECTION 36 TOWNSHIP 27 RANGE 3 QUARTER NW WESTGATE PARK DIV 2 BLK 002 D-02 LOT A OF SURV REC AFN 200203075001 BEING A PTN OF LOTS 10 & 11

PARCEL NUMBER:	00610700201001
JURISDICTION:	CITY OF EDMONDS
SECTION/TOWNSHIP/RANGE:	NW-36-27-03
ZONING:	BN (NEIGHBORHOOD BUSINESS)
AREA CALCS. AND CONDITIONS SITE AREA:	(1.01 ACRES) 43,996 S.F.

NO CHANGES OR IMPACTS TO SITE OR PARKING ARE PROPOSED

CITY OF EDMONDS
BUILDING DEPARTMENT
WORK Interior Remodel
ADDRESS 23028 100th Ave W
OWNER Bartell Drugs
APPROVED DATE: 4/24/12
BLDG. OFFICIAL [signature]
PERMIT NUMBER
BLD2012-0260

SHEET INDEX

ARCHITECTURAL:

A0.1 COVER SHEET
A0.2 ICC/ANSI GENERALCODE NOTES

A2.1 FLOOR AND EGRESS PLAN
A2.2 REFLECTED CEILING PLAN

A3.1 ENLARGED PLAN & REFLECTED CEILIING PLANS
A3.2 SALES FLOOR INTERIOR ELEVATIONS & FINISH SCHEDULE

A6.1 INTERIOR DETAILS

BUILDING DATA

BUILDING DATA:

EXISTING TENANT AREA 14,976 S.F.

ALLOWABLE AREA PER FLOOR: 36,000 S.F.
(BASED ON IBC TABLE 503 w/ SEC. 506.3 SPRINKLER INCREASE)

OCCUPANCY TYPE: M (MERCANTILE/RETAIL)

BUILDING TYPE: V-B, SPRINKLERED

OCCUPANT LOAD SUMMARY:

MERCANTILE AREAS: 11,386 S.F. (1/30 S.F.):	380 OCC
STORAGE AREAS: 1,252 S.F. (1/300 S.F.):	4 OCC
OFFICE, BREAK RM, PHARMACY & CLINIC AREAS: 1,089 S.F. (1/100 S.F.):	11 OCC
TOTAL OCCUPANTS:	395 OCC

NUMBER OF EXITS REQUIRED:	2
NUMBER OF EXITS PROVIDED:	3
EXIT WIDTH REQUIRED = 395 OCC X .20"/OCC:	79"
EXIT WIDTH REQUIRED EACH EXIT = 79"/3:	26"
EXIT WIDTH PROVIDED:	164"

PLUMBING FIXTURE COUNT:

NO CHANGES TO PLUMBING FIXTURES (OR REQUIREMENTS) PROPOSED.

FIRE RESISTIVE REQUIREMENTS:

1. VERIFY EXISTING NFPA 13 SPRINKLER SYSTEM, AND MONITORED FIRE ALARM SYSTEM ARE INSTALLED PER FIRE DISTRICT REQUIREMENTS AND PER I.F.C. 903.
2. MAX. TRAVEL DISTANCE WITH SPRINKLER: (M) OCCUPANCY = 250'-0"
3. MAX. COMMON PATH OF TRAVEL WITH SPRINKLER: (M) OCCUPANCY = 75'-0"

CONSTRUCTION TYPE V-N spr.
OCCUPANCY GROUP M
OCCUPANT LOAD 395

CITY COPY

ABBREVIATIONS

A.C.	AIR CONDITIONER	EXH.	EXHAUST	MTL.	METAL	REQ'D.	REQUIRED
ACOUS.	ACOUSTICAL	EXIST.	EXISTING	MFG.	MANUFACTURING	R.O.	ROUGH OPENING
ADJ	ADJUSTABLE, ADJACENT	EXP.	EXPANSION	MFR.	MANUFACTURER	SCHED.	SCHEDULE
ALUM	ALUMINUM	EXT.	EXTERIOR	M.H.	MANHOLE	S.C.	SOLID CORE
ANOD.	ANODIZED	F.D.	FLOOR DRAIN	MIN.	MINIMUM	SHT.	SHEET
APPROX.	APPROXIMATE	FDN.	FOUNDATION	MISC.	MISCELLANEOUS	SIM.	SIMILAR
ASR	AUTOMATIC SPRINKLER RISER	FF	FACTORY FINISH	M.O.	MASONRY OPENING	S.I.O.	SUPPLIED & INSTALLED BY OWNER
BD.	BOARD	FHS	FLAT HEAD SCREW	M.R.	MOISTURE RESISTANT	S.O.I.C.	SUPPLIED BY OWNER INSTALLED BY CONTRACTOR
BLDG.	BUILDING	FL.	FLOOR	MULL.	MULLION		
BLK.	BLOCK	F.I.O.	FURNISHED & INSTALLED BY OWNER	MTD.	MOUNTED	SPEC'D.	SPECIFIED
BLK'G.	BLOCKING			MTG.	MOUNTING	SQ.	SQUARE
BM.	BEAM	F.R.P.P.	FIBER REINFORCED PLASTIC PANEL(S)	N.I.C.	NOT IN CONTRACT	S.S.	SERVICE SINK, SANITARY SEWER
BOT.	BOTTOM			NOM.	NOMINAL	SST	STAINLESS STEEL
BTW.	BETWEEN	FTG.	FOOTING	N.T.S.	NOT TO SCALE	STD.	STANDARD
CB	CATCH BASIN	GA.	GAUGE	O.A.	OVERALL	STL.	STEEL
C.I.	CAST IRON	GALV.	GALVANIZED	O.C.	ON CENTER	STRUCT.	STRUCTURE, STRUCTURAL
C.I.P.	CAST IN PLACE	G.I.	GALVANIZED IRON	O.H.	OVERHEAD	SUSP.	SUSPENDED
CL.	CENTER LINE	GLP	GYPSUM LATH & PLASTER	OP'G.	OPENING	SYS.	SYSTEM
CLG.	CEILING	GWB	GYPSUM WALLBOARD, GYPSUM BOARD	OPP.	OPPOSITE	T	TREAD, TOP
CMU	CONCRETE MASONRY UNIT			PTN.	PARTITION	T&B	TOP & BOTTOM
		H.B.	HOSE BIBB	PERP.	PERPENDICULAR	TEL.	TELEPHONE
COL.	COLUMN	H.C.	HANDICAPPED	PL.	PLATE, PROPERTY LINE	TEMP.	TEMPERED
CONC.	CONCRETE	H.M.	HOLLOW METAL	PLAS.LAM.	PLASTIC LAMINATE	T&G	TONGUE & GROOVE
CONT.	CONTINUOUS	HORIZ.	HORIZONTAL	PLYWD.	PLYWOOD	T.G.	TEMPERED GLASS
CONSTR.	CONSTRUCTION	HT.	HEIGHT	PLBG.	PLUMBING	TYP.	TYPICAL
CONTR.	CONTRACTOR	HTR.	HEATER	PNL.	PANEL, PANELING	UTIL.	UTILITY
C.T.	CERAMIC TILE	INSUL.	INSULATION	PR.	PAIR	U.B.C.	UNIFORM BUILDING CODE
DBL	DOUBLE	JT./JTS.	JOINT,JOINTS	PROJ.	PROJECT	U.O.N.	UNLESS OTHERWISE NOTED
DTL.	DETAIL	L.	LONG, LENGTH	PRV	PRESSURE REDUCING VALVE	V.C.T.	VINYL COMPOSITION TILE
D.F.	DRINKING FOUNTAIN	LAM.	LAMINATE, LAMINATED			VERT.	VERTICAL
D.S.	DOWNSPOUT	L.F.	LINEAR FOOT, LINEAL FOOT	PT.	POINT	W/	WITH
DRWG.	DRAWING	LIQ.	LIQUID	Q.T.	QUARRY TILE	W/O	WITHOUT
EA.	EACH	LT.WT.	LIGHT WEIGHT	QTR.	QUARTER	WD.	WOOD
E.F.S.	EXTERIOR FINISH SYSTEM	MAS.	MASONRY	R	RADIUS	WDW.	WINDOW
E.I.F.S.	EXTERIOR INSULATION & FINISH SYSTEM	MAX.	MAXIMUM	R.D.	ROOF DRAIN	W.P.	WATERPROOF
		M.B.S.	METAL BUILDING SUPPLIER	R.L.	RAIN LEADER	W.R.	WATER RESISTANT
ELEV.	ELEVATION, ELEVATOR	MECH.	MECHANICAL	REC'D.	RECEIVED	WT.	WEIGHT
ELEC.	ELECTRICAL	MEZZ.	MEZZANINE	REF.	REFRIGERATOR	W.W.M.	WELDED WIRE MESH
ENCL.	ENCLOSURE			REINF.	REINFORCING	W.W.F.	WELDED WIRE FABRIC
EQ.	EQUAL					Y.D.	YARD DRAIN

LEGEND OF SYMBOLS

- REVISION NO. (TITLE BLOCK SHOWS REV. DATE)
- INDICATES REVISED AREA
- DETAIL NO. DESIGNATION
- SHEET THAT DETAIL IS SHOWN
- BLDG. SECTION NO.
- SHEET THAT SECTION IS SHOWN
- WALL SECTION NO.
- SHEET THAT SECTION IS SHOWN
- INTERIOR ELEV. NO.
- WALL ORIENTATION
- SHEET THAT INTERIOR ELEV. IS SHOWN
- NORTH ARROW
- SHEET KEY NOTE
- DOOR SCHEDULE KEY (CORRESP. TO ROOM NO. WHERE DOOR OCCURS)
- DOOR SUFFIX
- WINDOW SCHEDULE KEY
- ROOM NAME
- ROOM NO.
- ROOM AREA
- FINISH SCHEDULE KEY
- EQUIP. SCHEDULE KEY
- CASEWORK DTL. NO.
- SHEET NO.
- WALL TYPE NO.
- INSULATION KEY
- DATUM POINT
- CEILING HEIGHT
- FINISH CEILING TYPE
- GRID DESIGNATION
- ROOF SLOPE AND DIRECTION KEY
- BREAK LINE SYMBOL
- MATCH LINE MARKER

PROJECT TEAM

CLIENT:
BARTELL DRUGS
4727 DENVER AVENUE SOUTH
SEATTLE, WA 98134-2316
PH: (206) 763-2626
CELL: -
FAX: -
CONTACT: BOB EDWARDS
EMAIL: bobe@bartelldrugs.com

CONTRACTOR:
TDB
PH:
CELL:
FAX:
PM CONTACT:
EMAIL:

ARCHITECT:
MAGELLAN ARCHITECTS
8383 158TH AVE NE, STE 280
REDMOND, WA 98052
PH: (425) 885-4300
FAX: (425) 885-4303
RECORD ARCH: PEDRO CASTRO
PM CONTACT: BRIANNE CULLEY
EMAIL: brianne@magellanarchitects.com

STRUCTURAL ENGINEER:
CT ENGINEERING
180 NICKERSON STREET, SUITE 302
SEATTLE, WA
PH: (206) 285-4512
FAX: (206) 285-0618
RECORD ENG: CHARLES GRIFFES
PM CONTACT: CHUCK MORRIS
EMAIL: cmorris@ctengineering.com

APPROVED
FIRE DEPARTMENT
4-25-12

DESIGN CODES

2009	INTERNATIONAL BUILDING CODE (IBC)
2008	NATIONAL ELECTRICAL CODE
2009	INTERNATIONAL FIRE CODE
2009	INTERNATIONAL MECHANICAL CODE
2009	UNIFORM PLUMBING CODE
2009	WASHINGTON STATE ENERGY CODE
2003	ICC/ANSI A117.1-2003
ADAAG	FEDERAL ACCESSIBILITY GUIDELINES FOR BUILDINGS AND FACILITIES
	CITY OF EDMONDS MUNICIPAL CODE

SCOPE OF WORK

TENANT IMPROVEMENT FOR INTERIOR REMODEL OF EXISTING BARTELL DRUG STORE LOCATION. NO ADDITIONAL SQUARE FOOTAGE TO BE ADDED. REPLACEMENT OF COOLER/FREEZER IN NEW LOCATION, INFILL FRAMING AT OLD COOLER LOCATION. NEW CEILING AND WALL HUNG MERCHANDISING ELEMENTS, REPLACEMENT OF SOME ACOUSTIC CEILING TILE TO CREATE UNIFORM CEILING THROUGHOUT. NEW FINISHES THROUGHOUT SALES FLOOR. THERE IS NO CHANGE OF USE.

RECEIVED
APR 12 2012
DEVELOPMENT SERVICES COUNTER

7855
REGISTERED ARCHITECT
Pedro A. de Magalhaes Castro
STATE OF WASHINGTON

Copyright © 2012 Magellan Associates PLLC
All rights reserved. The documents prepared by the Architect for this project are instruments of the Architect's service for use solely with respect to this project.
No part of this plan may be copied, reproduced, or transmitted in any form or by any means, electronic or mechanical (including photocopying, recording, or any information retrieval system), without the express written approval of Magellan Associates PLLC. No derivative works of this plan may be made without prior written permission. The purchase of this set of plans entitles the purchaser to use this set of plans for the construction of only one building. The purchase of additional set(s) of plans does not entitle the purchaser to construct more than one building.

Magellan ARCHITECTS
8383 158th Avenue Northeast, Suite 280
Redmond, Washington 98052
Tel (425) 885-4300 Fax (425) 885-4303
www.magellanarchitects.com

BARTELL DRUGS
Washington's Own Drugstores®

BARTELL EDMONDS #58
TENANT IMPROVEMENT
23028 100TH AVE W
EDMONDS, WASHINGTON 98020

REVISIONS		
NO.	DATE	BY
△		
△		
△		
△		
△		
△		

ISSUE DATES	
DESIGN APPROVAL:	
PERMIT SUBMITTAL:	4/11/12
PERMIT RECEIVED:	
BID DOCS:	
CONSTR. DOCS:	

24"x36" SCALE:	AS NOTED
PLOT DATE:	4/11/12
CAD FILE:	12-030A01
JOB NUMBER:	12-030
CHECKED:	DYM
DRAWN:	BC
STATUS:	PERMIT

COVER SHEET
A0.1

ACCESSIBLE ROUTES (ICC/ANSI SECTION 402): ACCESSIBLE ROUTES SHALL CONSIST OF ONE OR MORE OF THE FOLLOWING COMPONENTS: WALKING SURFACES WITH A SLOPE NOT STEEPER THAN 1:20, DOORWAYS, RAMPS, CURB RAMPS, ELEVATORS, AND WHEELCHAIR (PLATFORM) LIFTS. ALL COMPONENTS OF AN ACCESSIBLE ROUTE SHALL COMPLY WITH THE APPLICABLE PORTIONS OF THIS STANDARD.

WALKING SURFACES (ICC/ANSI SECTION 403): SLOPE: THE RUNNING SLOPE OF WALKING SURFACES SHALL NOT BE STEEPER THAN 1:20. THE CROSS SLOPE OF A WALKING SURFACE SHALL NOT BE STEEPER THAN 1:48. CLEAR WIDTH: CLEAR WIDTH OF AN ACCESSIBLE ROUTE SHALL COMPLY WITH ICC/ANSI TABLE 403.5. CLEAR WIDTH AT TURN: WHERE AN ACCESSIBLE ROUTE MAKES A 180 DEGREE TURN AROUND AN OBJECT WHICH IS LESS THAN 48 INCHES WIDE, CLEAR WIDTHS SHALL BE 42 INCHES MIN. APPROACHING THE TURN, 48 INCHES MIN. DURING THE TURN, AND 42 INCHES MIN. LEAVING THE TURN. PASSING SPACE: AN ACCESSIBLE ROUTE WITH A CLEAR WIDTH LESS THAN 60 INCHES SHALL PROVIDE PASSING SPACES AT INTERVALS OF 200 FEET MAX. THESE PASSING SPACES SHALL BE EITHER A 60 INCH BY 60 INCH MIN. SPACE, OR AN INTERSECTION OF TWO WALKING SURFACES WHICH PROVIDE A T-SHAPED TURNING SPACE COMPLYING WITH ICC/ANSI SECTION 304.

RAMPS (ICC/ANSI SECTION 405): WALKING SURFACES ON ACCESSIBLE ROUTES WITH A RUNNING SLOPE STEEPER THAN 1:20 ARE RAMPS. RAMP RUNS SHALL HAVE A RUNNING SLOPE NOT STEEPER THAN 1:12. CROSS SLOPE OF RAMP RUNS SHALL NOT BE STEEPER THAN 1:48. THE CLEAR WIDTH OF A RAMP RUN SHALL BE 36 INCHES MIN. THE RISE FOR ANY RAMP RUN SHALL BE 30 INCHES MAX. OUTDOOR RAMPS AND APPROACHES TO RAMPS SHALL BE DESIGNED SO THAT WATER WILL NOT ACCUMULATE ON WALKING SURFACES. LANDINGS: RAMPS SHALL HAVE LANDINGS AT BOTTOM AND TOP OF EACH RUN. SLOPE. LANDINGS SHALL HAVE A SLOPE NOT STEEPER THAN 1:48 AND THE CLEAR WIDTH OF LANDINGS SHALL BE AT LEAST AS WIDE AS THE WIDEST RAMP RUN LEADING TO THE LANDING. LANDING LENGTH SHALL BE 60 INCHES MIN. CLEAR. RAMPS THAT CHANGE DIRECTION AT LANDINGS SHALL HAVE A 60 INCH MIN. BY 60 INCH MIN. LANDING. DOORWAYS: WHERE DOORWAYS ARE ADJACENT TO A RAMP LANDING, MANEUVERING CLEARANCES REQUIRED BY ICC/ANSI SECTIONS 404.2.4 AND 404.3.2 SHALL BE PERMITTED TO OVERLAP THE LANDING AREA. HANDRAILS: RAMPS WITH A RISE GREATER THAN 6 INCHES SHALL HAVE HANDRAILS COMPLYING WITH ICC/ANSI SECTION 505. HANDRAILS SHALL NOT REDUCE THE REQUIRED CLEARANCES OF A RAMP RUN OR LANDING. EDGE PROTECTION SHALL BE PROVIDED ON EACH SIDE OF RAMP RUNS AND AT EACH SIDE OF RAMP LANDINGS. THE FLOOR OR GROUND SURFACE OF THE RAMP RUN OR LANDING SHALL EXTEND 12 INCHES MIN. BEYOND THE INSIDE FACE OF A RAILING COMPLYING WITH ICC/ANSI SECTION 505. CURB OR BARRIER: A CURB OR BARRIER SHALL BE PROVIDED THAT PREVENTS THE PASSAGE OF A 4-INCH DIAMETER SPHERE BELOW A HEIGHT OF 4 INCHES.

CURB RAMPS (ICC/ANSI SECTION 406): CURB RAMPS SHALL BE 36 INCHES WIDE MIN., EXCLUSIVE OF FLARED SIDES. CURB RAMPS AND THEIR SIDE FLARES SHALL NOT PROTRUDE INTO VEHICULAR TRAFFIC LANES, PARKING SPACES, OR INTO PARKING SPACE ACCESS AISLES. THEY SHALL BE LOCATED OR PROTECTED TO PREVENT THEIR OBSTRUCTION BY PARKED VEHICLES. HANDRAILS ARE NOT REQUIRED. SIDES OF CURB RAMPS: WHERE PEDESTRIANS MUST WALK ACROSS A CURB RAMP, THE RAMP SHALL HAVE FLARED SIDES. SLOPE OF FLARES SHALL NOT BE STEEPER THAN 1:10. WHERE THE WIDTH OF THE WALKING SURFACE AT THE TOP OF THE RAMP AND PARALLEL TO THE RUN OF THE RAMP IS LESS THAN 48 INCHES WIDE, THE FLARED SIDES SHALL HAVE A SLOPE NOT STEEPER THAN 1:12. CURB RAMPS WITH RETURNED CURBS SHALL BE PERMITTED WHERE PEDESTRIANS WOULD NOT NORMALLY WALK ACROSS THE RAMP. COUNTER SLOPE: COUNTER SLOPES OF ADJOINING GUTTERS AND ROAD SURFACES IMMEDIATELY ADJACENT TO THE CURB RAMP OR ACCESSIBLE ROUTE SHALL NOT BE STEEPER THAN 1:20. TRANSITIONS FROM RAMPS TO WALKS, GUTTERS OR STREETS SHALL BE AT THE SAME LEVEL. LOCATION AT MARKED CROSSINGS: CURB RAMPS AT MARKED CROSSINGS SHALL BE WHOLLY CONTAINED WITHIN THE MARKINGS, EXCLUDING ANY FLARED SIDES. DIAGONAL CURB RAMPS: DIAGONAL OR CORNER TYPE CURB RAMPS WITH RETURNED CURBS OR OTHER WELL-DEFINED EDGES SHALL HAVE THE EDGES PARALLEL TO THE DIRECTION OF PEDESTRIAN FLOW. BOTTOMS OF DIAGONAL CURB RAMPS SHALL HAVE 48 INCHES MIN. CLEAR SPACE, MEASURED PARALLEL TO THE RUNNING SLOPE. DIAGONAL CURB RAMPS PROVIDED AT MARKED CROSSINGS SHALL PROVIDE THE MIN. CLEAR SPACE WITHIN THE MARKINGS. DIAGONAL CURB RAMPS WITH FLARED SIDES SHALL HAVE A SEGMENT OF STRAIGHT CURB 24 INCHES LONG MIN. ON EACH SIDE OF THE CURB RAMP AND WITHIN THE MARKED CROSSING. ISLANDS: RAISED ISLANDS IN CROSSINGS SHALL BE CUT THROUGH LEVEL WITH THE STREET OR HAVE CURB RAMPS AT BOTH SIDES, AND A LEVEL AREA 48 INCHES LONG MIN. BY 36 INCHES WIDE MIN., IN THE PART OF THE ISLAND INTERSECTED BY THE CROSSING.

PARKING SPACES (ICC/ANSI SECTION 502): VEHICLE SPACES: CAR AND VAN PARKING SPACES SHALL BE 96 INCHES WIDE MIN. AND SHALL HAVE AN ADJACENT ACCESS AISLE. ACCESS AISLE: TWO PARKING SPACES SHALL BE PERMITTED TO SHARE A COMMON ACCESS AISLE. PARKED VEHICLE OVERHANGS SHALL NOT REDUCE THE CLEAR WIDTH OF AN ACCESSIBLE ROUTE. ACCESS AISLES SERVING CAR PARKING SPACES SHALL BE 60 INCHES WIDE MIN. ACCESS AISLES SERVING VAN PARKING SPACES SHALL BE 96 INCHES WIDE MIN. ACCESS AISLES SHALL EXTEND THE FULL LENGTH OF THE PARKING SPACES THEY SERVE AND THEY SHALL BE MARKED SO AS TO DISCOURAGE PARKING IN THEM. FLOOR OR GROUND SURFACES: PARKING SPACES AND ACCESS AISLES SHALL HAVE SURFACE SLOPES NOT STEEPER THAN 1:48. ACCESS AISLES SHALL BE AT THE SAME LEVEL AS THE PARKING SPACES THEY SERVE. VERTICAL CLEARANCE: PARKING SPACES FOR VANS SHALL HAVE A VERTICAL CLEARANCE OF 98 INCHES MIN. AT THE SPACE AND ALONG THE VEHICULAR ROUTE THERETO. IDENTIFICATION: WHERE ACCESSIBLE PARKING SPACES ARE REQUIRED TO BE IDENTIFIED BY SIGNS, THE SIGNS SHALL INCLUDE THE INTERNATIONAL SYMBOL OF ACCESSIBILITY COMPLYING WITH ICC/ANSI SECTION 703. SUCH SIGNS SHALL BE 60 INCHES MIN. ABOVE THE FLOOR OR GROUND SURFACE OF THE PARKING SPACE, MEASURED TO THE BOTTOM OF THE SIGN.

PASSENGER LOADING ZONES (ICC/ANSI SECTION 503): VEHICLE PULL-UP SPACE: PASSENGER LOADING ZONES SHALL PROVIDE AN ACCESS AISLE ADJACENT AND PARALLEL TO A VEHICLE PULL-UP SPACE. ACCESS AISLES SHALL BE PART OF THE ACCESSIBLE ROUTE TO THE BUILDING OR FACILITY ENTRANCE. ACCESS AISLES SERVING VEHICLE PULL-UP SPACES SHALL BE 60 INCHES WIDE MIN. AND 20 FEET LONG MIN. ACCESS AISLES SHALL BE MARKED SO AS TO DISCOURAGE PARKING IN THEM. FLOOR OR GROUND SURFACES: VEHICLE PULL-UP SPACES IN PASSENGER LOADING ZONES AND ACCESS AISLES SHALL HAVE SURFACE SLOPES NOT STEEPER THAN 1:48. ACCESS AISLES SHALL BE AT THE SAME LEVEL AS THE VEHICLE PULL-UP SPACE THEY SERVE. VERTICAL CLEARANCE: VERTICAL CLEARANCE OF 114 INCHES MIN. SHALL BE PROVIDED AT PASSENGER LOADING ZONES AND ALONG VEHICLE ACCESS ROUTES TO SUCH AREAS FROM SITE ENTRANCES.

STAIRWAYS (ICC/ANSI SECTION 504): TREADS AND RISERS: ALL STEPS ON A FLIGHT OF STAIRS SHALL HAVE UNIFORM RISER HEIGHTS AND UNIFORM TREAD DEPTH. RISERS SHALL BE 4 INCHES HIGH MIN. AND 7 INCHES MAX. TREADS SHALL BE 11 INCHES DEEP MIN., MEASURED FROM RISER TO RISER. OPEN RISERS SHALL NOT BE PERMITTED. STAIR TREAD SURFACE SHALL COMPLY WITH ICC/ANSI SECTION 302. NOSINGS: THE RADIUS OF CURVATURE AT THE LEADING EDGE OF THE TREAD SHALL BE 1/2 INCH MAX. NOSINGS THAT PROJECT BEYOND RISERS SHALL HAVE THE UNDERSIDE OF THE LEADING EDGE CURVED OR BEVELED. RISERS SHALL BE PERMITTED TO SLOPE UNDER THE TREAD AT AN ANGLE OF 30 DEGREES MAX. FROM VERTICAL. THE PERMITTED PROJECTION OF THE NOSING SHALL BE 1-1/2 INCHES MAX. BEYOND THE TREAD BELOW. OUTDOOR CONDITIONS: OUTDOOR STAIRS AND OUTDOOR APPROACHES TO STAIRS SHALL BE DESIGNED SO THAT WATER WILL NOT ACCUMULATE ON WALKING SURFACES.

HANDRAILS (ICC/ANSI SECTION 505): LOCATION: HANDRAILS SHALL BE PROVIDED ON BOTH SIDES OF STAIRS AND RAMPS. EXCEPT AISLE STAIRS AND AISLE RAMPS PROVIDED WITH A HANDRAIL EITHER AT THE SIDE OR WITHIN THE AISLE WIDTH. CONTINUITY: HANDRAILS SHALL BE CONTINUOUS WITHIN THE FULL LENGTH OF EACH STAIR FLIGHT OR RAMP RUN. INSIDE HANDRAILS ON SWITCHBACK OR DOGLEG STAIRS OR RAMPS SHALL BE CONTINUOUS BETWEEN FLIGHTS OR RUNS. HEIGHT: TOP OF GRIPPING SURFACES OF HANDRAILS SHALL BE 34 INCHES MIN. AND 38 INCHES MAX. VERTICALLY ABOVE STAIR NOSINGS AND RAMP SURFACES. HANDRAILS SHALL BE AT A CONSISTENT HEIGHT ABOVE STAIR NOSINGS AND RAMP SURFACES. CLEARANCE – CLEAR SPACE BETWEEN HANDRAIL AND WALL SHALL BE 1-1/2 INCHES MIN. GRIPPING SURFACE: GRIPPING SURFACES SHALL BE CONTINUOUS, WITHOUT INTERRUPTION BY NEWEL POSTS, OTHER CONSTRUCTION ELEMENTS, OR OBSTRUCTIONS. HANDRAIL BRACKETS OR BALUSTERS ATTACHED TO THE BOTTOM SURFACE OF THE HANDRAIL ARE ALLOWED IF NOT MORE THAN 20 PERCENT OF THE HANDRAIL LENGTH IS OBSTRUCTED. HORIZONTAL PROJECTIONS BEYOND THE SIDES OF THE HANDRAIL OCCUR 2-1/2 INCHES MIN. BELOW THE BOTTOM OF THE HANDRAIL, AND EDGES HAVE A 1/8 INCH MIN. RADIUS. HANDRAILS, AND ANY WALL OR OTHER SURFACES ADJACENT TO THEM, SHALL BE FREE OF ANY SHARP OR ABRASIVE ELEMENTS. HANDRAILS SHALL NOT ROTATE WITHIN THEIR FITTINGS AND THEY SHALL HAVE A CIRCULAR CROSS SECTION WITH AN OUTSIDE DIAMETER OF 1-1/4 INCH MIN. AND 2 INCHES MAX. NON-CIRCULAR CROSS SECTIONS: HANDRAILS WITH OTHER SHAPES SHALL BE PERMITTED PROVIDED THEY HAVE A PERIMETER DIMENSION OF 4 INCHES MIN. AND 6-1/4 INCHES MAX., AND PROVIDED THEIR LARGEST CROSS-SECTION DIMENSION IS 2-1/4 INCHES MAX.. TOP EXTENSION AT STAIRS: AT THE TOP OF A STAIR FLIGHT, HANDRAILS SHALL EXTEND HORIZONTALLY ABOVE THE LANDING FOR 12 INCHES MIN. BEGINNING DIRECTLY ABOVE THE FIRST RISER NOSING. SUCH EXTENSION SHALL RETURN TO A WALL, GUARD, OR THE WALKING SURFACE, OR SHALL BE CONTINUOUS TO THE HANDRAIL OF AN ADJACENT STAIR FLIGHT. BOTTOM EXTENSION AT STAIRS: AT THE BOTTOM OF A STAIR FLIGHT, HANDRAILS SHALL EXTEND AT THE SLOPE OF THE STAIR FLIGHT FOR A HORIZONTAL DISTANCE EQUAL TO ONE TREAD DEPTH BEYOND THE LAST RISER NOSING. IF PROVIDED AT THE BOTTOM OF A STAIR FLIGHT, A HORIZONTAL EXTENSION OF A HANDRAIL SHALL BE 12 INCHES LONG MIN. AND A HEIGHT EQUAL TO THAT OF THE SLOPING PORTION OF THE HANDRAIL AS MEASURED ABOVE THE STAIR NOSINGS. SUCH EXTENSION SHALL RETURN TO A WALL, GUARD, OR THE WALKING SURFACE, OR SHALL BE CONTINUOUS TO THE HANDRAIL OF AN ADJACENT STAIR FLIGHT.

SIGNAGE (ALL SIGNAGE TO COMPLY WITH ICC/ANSI CHAPTER 7): ACCESSIBLE ENTRANCES: ACCESSIBLE BUILDING ENTRANCES SHALL BE IDENTIFIED WITH STANDARD SIGNS AND DIRECTIONAL SIGNS THAT COMPLY WITH ICC/ANSI SECTION 704 AND ARE VISIBLE TO PERSONS ALONG APPROACHING PEDESTRIAN WAYS. THE INTERNATIONAL SYMBOL OF ACCESSIBILITY IS REQUIRED TO IDENTIFY FACILITIES THAT ARE ACCESSIBLE. THE SYMBOL IS TO BE A WHITE FIGURE ON BLUE BACKGROUND (COLOR NO. 15090) IN FEDERAL STANDARD 595A. EXCEPTION: A SPECIAL SIGN OR IDENTIFICATION WHICH COMPLEMENTS DÉCOR OR A UNIQUE DESIGN MAY BE APPROVED WHEN IT IS DETERMINED BY AN ENFORCING AGENCY THAT SUCH SIGNS AND IDENTIFICATION PROVIDE ADEQUATE DIRECTION BRAILLE: CONTRACTED GRADE 2 BRAILLE IS TO BE USED WHEREVER BRAILLE IS REQUIRED. DOTS TO BE .01 INCH ON CENTERS IN EACH CELL WITH .02 INCH SPACE BETWEEN CELLS. DOTS ARE RAISED A MIN. OF 0.025 INCH ABOVE THE BACKGROUND. CHARACTERS: LETTERS AND NUMBERS ON SIGNS ARE TO HAVE A WIDTH TO HEIGHT RATIO OF BETWEEN 3:5 AND 1:1, AND A STROKE WIDTH TO HEIGHT RATIO BETWEEN 1:5 AND 1:10. WHEN RAISED OR RECESSED CHARACTERS OR SYMBOLS ARE USED, THEY ARE TO BE RAISED OR RECESSED A MIN. 1/32 INCH AND ARE TO BE SANS SERIF TYPE FONT. RAISED CHARACTERS ARE TO BE AT LEAST 5/8 INCH HIGH AND RECESSED CHARACTERS AND SYMBOLS ARE TO HAVE A 1/4 INCH MIN. STROKE WIDTH. DOORWAYS: ON DOORWAYS LEADING TO A UNISEX FACILITY, THE SYMBOL TO BE PROVIDED SHALL BE AN EQUILATERAL TRIANGLE INSCRIBED WITHIN A 12 INCH DIAMETER CIRCLE 1/4 INCH THICK EACH.

FLOOR OR GROUND SURFACES (ICC/ANSI SECTS 302 & 303): GENERAL: FLOOR OR GROUND SURFACES SHALL BE STABLE, FIRM, AND SLIP RESISTANT. CHANGES IN LEVEL OF 1/4 INCH HIGH MAX. SHALL BE PERMITTED TO BE VERTICAL. CHANGES IN LEVEL BETWEEN 1/4 INCH HIGH MIN. AND 1-1/2 INCH HIGH MAX. SHALL BE BEVELED WITH A SLOPE NOT STEEPER THAN 1:2. CHANGES IN LEVEL GREATER THAN 1/2 INCH SHALL BE RAMPED AND SHALL COMPLY WITH ICC/ANSI SECTION 405 OR 406.

WHEELCHAIR TURNING SPACE AND CLEAR SPACE (ICC/ANSI SECTS 304 AND 305): CLEAR FLOOR OR GROUND SURFACE: FLOOR OR GROUND SURFACES OF A WHEELCHAIR TURNING SPACE SHALL HAVE A SLOPE NOT STEEPER THAN 1:48. THE CLEAR FLOOR OR GROUND SPACE SHALL BE 30 INCHES MIN. BY 48 INCHES MIN. AND SHALL BE POSITIONED FOR EITHER FORWARD OR PARALLEL APPROACH TO AN ELEMENT. ONE FULL, UNOBSTRUCTED SIDE OF THE CLEAR FLOOR OR GROUND SPACE SHALL ADJOIN OR OVERLAP AN ACCESSIBLE ROUTE OR ADJOIN ANOTHER CLEAR FLOOR OR GROUND SPACE. CIRCULAR SPACE: THE WHEELCHAIR TURNING SPACE SHALL BE NOT LESS THAN 60 INCHES DIAMETER MIN. WHEELCHAIR TURNING SPACE SHALL BE PERMITTED TO INCLUDE KNEE AND TOE CLEARANCES. T-SHAPED SPACE: THE WHEELCHAIR TURNING SPACE MAY BE A T-SHAPED SPACE WITHIN A 60 INCH MIN. SQUARE WITH ARMS AND BASE 36 INCHES WIDE MIN. EACH ARM OF THE T SHALL BE CLEAR OF OBSTRUCTIONS 12 INCHES MIN. IN EACH DIRECTION AND THE BASE SHALL BE CLEAR OF OBSTRUCTIONS 24 INCHES MIN. T-SHAPED WHEELCHAIR TURNING SPACES SHALL BE PERMITTED TO INCLUDE KNEE AND TOE CLEARANCES ONLY AT THE END OF EITHER THE BASE OR ONE ARM. DOORS: UNLESS OTHERWISE SPECIFIED, DOORS SHALL BE PERMITTED TO SWING INTO WHEELCHAIR TURNING SPACES NOT MORE THAN 12". ALCOVE CLEAR FLOOR SPACE: FORWARD APPROACH – THE WIDTH OF AN ALCOVE SHALL BE 36 INCHES MIN. WHERE THE DEPTH EXCEEDS 24 INCHES. PARALLEL APPROACH – THE WIDTH OF AN ALCOVE SHALL BE 60 INCHES MIN. WHERE THE DEPTH EXCEEDS 15 INCHES.

KNEE AND TOE CLEARANCE (ICC/ANSI SECTION 306): TOE CLEARANCE: SPACE UNDER AN ELEMENT BETWEEN THE FLOOR OR GROUND AND 9 INCHES ABOVE THE FLOOR OR GROUND SHALL BE TOE CLEARANCE. MAX. DEPTH IS PERMITTED TO EXTEND 25 INCHES MAX. UNDER AN ELEMENT AND 17 INCHES MIN. BENEATH THE ELEMENT. TOE CLEARANCE SHALL BE 30 INCHES WIDE MIN. KNEE CLEARANCE: SPACE UNDER AN ELEMENT BETWEEN 9 INCHES AND 27 INCHES ABOVE THE FLOOR OR GROUND SHALL BE KNEE CLEARANCE. KNEE CLEARANCE SHALL BE PERMITTED TO EXTEND 25 INCHES MAX. UNDER AN ELEMENT AT 9 INCHES ABOVE THE FLOOR OR GROUND. WHERE KNEE CLEARANCE IS REQUIRED BENEATH AN ELEMENT AS PART OF A CLEAR FLOOR OR GROUND SPACE, THE KNEE CLEARANCE SHALL BE 11 INCHES DEEP MIN. AT 9 INCHES ABOVE THE FLOOR OR GROUND, AND 8 INCHES DEEP MIN. AT 27 INCHES ABOVE THE FLOOR OR GROUND. KNEE CLEARANCE SHALL BE 30 INCHES WIDE MIN.

PROTRUDING OBJECTS (ICC/ANSI SECTION 307): PROTRUSION LIMITS: OBJECTS WITH LEADING EDGES MORE THAN 27 INCHES AND NOT MORE THAN 80 INCHES ABOVE THE FLOOR OR GROUND SHALL PROTRUDE 4 INCHES MAX. HORIZONTALLY INTO THE CIRCULATION PATH. HANDRAILS SERVING STAIRS AND RAMPS SHALL BE PERMITTED TO PROTRUDE 4-1/2 INCHES MAX. GUARDRAILS OR OTHER BARRIERS SHALL BE PROVIDED WHERE VERTICAL CLEARANCE IS LESS THAN 80 INCHES HIGH. LEADING EDGE OF SUCH GUARDRAIL OR BARRIER SHALL BE 27 INCHES MAX. ABOVE THE FLOOR OR GROUND. PROTRUDING OBJECTS SHALL NOT REDUCE THE CLEAR WIDTH REQUIRED FOR ACCESSIBLE ROUTES. POST-MOUNTED OBJECTS: OBJECTS ON A SINGLE POST OR PYLON SHALL BE PERMITTED TO OVERHANG 12 INCHES MAX. WHERE MORE THAN 27 INCHES AND NOT MORE THAN 80 INCHES ABOVE THE FLOOR OR GROUND.

REACH RANGES (ICC/ANSI SECTION 308): UNOBSTRUCTED REACH: WHERE A CLEAR FLOOR OR GROUND SPACE ALLOWS A PARALLEL APPROACH TO AN ELEMENT AND THE SIDE REACH IS UNOBSTRUCTED, THE HIGH SIDE REACH SHALL BE 48 INCHES MAX. AND THE LOW SIDE REACH SHALL BE 15 INCHES MIN. ABOVE THE FLOOR OR GROUND. EXISTING ELEMENTS SHALL BE PERMITTED AT 54 INCHES MAX. ABOVE THE FLOOR OR GROUND. OBSTRUCTED HIGH FORWARD REACH: WHERE A HIGH FORWARD REACH IS OVER AN OBSTRUCTION, THE CLEAR FLOOR OR GROUND SPACE SHALL EXTEND BENEATH THE ELEMENT FOR A DISTANCE NOT LESS THAN THE REQUIRED REACH DEPTH OVER THE OBSTRUCTION. THE HIGH FORWARD REACH SHALL BE 48 INCHES MAX. WHERE THE REACH DEPTH IS 20 INCHES MAX. WHERE THE REACH DEPTH EXCEEDS 20 INCHES, THE HIGH FORWARD REACH SHALL BE 44 INCHES MAX. AND THE REACH DEPTH SHALL BE 25 INCHES MAX. OBSTRUCTED HIGH SIDE REACH: WHERE A CLEAR FLOOR OR GROUND SPACE ALLOWS A PARALLEL APPROACH TO AN OBJECT AND THE HIGH SIDE REACH IS OVER AN OBSTRUCTION, THE HEIGHT OF THE OBSTRUCTION SHALL BE 34 INCHES MAX., AND THE DEPTH OF THE OBSTRUCTION SHALL BE 24 INCHES MAX. THE HIGH SIDE REACH SHALL BE 48 INCHES MAX. FOR A REACH DEPTH OF 10 INCHES MAX. WHERE THE REACH DEPTH EXCEEDS 10 INCHES, THE HIGH SIDE REACH SHALL BE 46 INCHES MAX. FOR A REACH DEPTH OF 24 INCHES MAX.

OPERABLE PARTS (ICC/ANSI SECTION 309): HEIGHT: OPERABLE PARTS SHALL BE PLACED WITHIN ONE OR MORE OF THE REACH RANGES. EXCEPT WHERE THE USE OF SPECIAL EQUIPMENT DICTATES OTHERWISE, OR WHERE ELECTRICAL AND COMMUNICATIONS SYSTEMS RECEPTACLES ARE NOT NORMALLY INTENDED FOR USE BY BUILDING OCCUPANTS. OPERATION: OPERABLE PARTS SHALL BE OPERABLE WITH ONE HAND AND SHALL NOT REQUIRE TIGHT GRASPING, PINCHING, OR TWISTING OF THE WRIST. THE FORCE REQUIRED TO ACTIVATE OPERABLE PARTS SHALL BE 5 POUNDS MAX.

MANUAL DOORS AND DOORWAYS (ICC/ANCI SECTION 404): CLEAR WIDTH: DOORWAYS SHALL HAVE A CLEAR OPENING OF 32 INCHES MIN. CLEAR OPENING OF DOORWAYS WITH SWINGING DOORS SHALL BE MEASURED BETWEEN THE FACE OF DOOR AND STOP, WITH THE DOOR OPEN 90 DEGREES. OPENINGS MORE THAN 24 INCHES DEEP SHALL PROVIDE A CLEAR OPENING OF 36 INCHES MIN. THERE SHALL BE NO PROJECTIONS INTO THE CLEAR OPENING WIDTH LOWER THAN 34 INCHES ABOVE THE FLOOR OR GROUND. PROJECTIONS INTO THE MIN. CLEAR OPENING WIDTH MORE THAN 34 INCHES AND UP TO 80 INCHES ABOVE THE FLOOR OR GROUND ARE PERMITTED BUT SHALL NOT EXCEED 4 INCHES. RECESSED DOORS: WHERE THE PLANE OF THE DOORWAY IS RECESSED MORE THAN 8 INCHES FROM THE PLANE OF THE WALL. CLEARANCES FOR FRONT APPROACH SHALL BE PROVIDED. TWO DOORS IN SERIES: DISTANCE BETWEEN TWO HINGED OR PIVOTED DOORS IN SERIES SHALL BE 48 INCHES MIN. PLUS THE WIDTH OF ANY DOOR SWINGING INTO THE SPACE. DOORS IN SERIES SHALL SWING EITHER IN SAME DIRECTION OR AWAY FROM SPACE BETWEEN DOORS. DOOR HARDWARE: HANDLES, PULLS, LATCHES, LOCKS, AND OTHER OPERABLE PARTS ON ACCESSIBLE DOORS SHALL HAVE A SHAPE THAT IS EASY TO GRASP WITH ONE HAND AND DOES NOT REQUIRE TIGHT GRASPING, PINCHING, OR TWISTING OF THE WRIST TO OPERATE. SUCH HARDWARE SHALL BE 34 INCHES MIN. AND 48 INCHES MAX. ABOVE THE FLOOR OR GROUND. WHERE SLIDING DOORS ARE IN THE FULLY OPEN POSITION, OPERATING HARDWARE SHALL BE EXPOSED AND USABLE FROM BOTH SIDES. DOOR CLOSERS: DOOR CLOSERS SHALL BE ADJUSTED SO THAT FROM AN OPEN POSITION OF 90 DEGREES, THE TIME REQUIRED TO MOVE THE DOOR TO AN OPEN POSITION OF 12 DEGREES SHALL BE 5 SECONDS MIN. SPRING HINGES: DOOR SPRING HINGES SHALL BE ADJUSTED SO THAT FROM THE OPEN POSITION OF 70 DEGREES, THE DOOR SHALL MOVE TO THE CLOSED POSITION IN 1.5 SECONDS MIN., MEASURED UNDER AMBIENT CONDITIONS. DOOR-OPENING FORCE: FIRE DOORS SHALL HAVE THE MIN. OPENING FORCE ALLOWABLE BY THE APPROPRIATE ADMINISTRATIVE AUTHORITY. THE MAX. FORCE FOR PUSHING OPEN OR PULLING OPEN DOORS OTHER THAN FIRE DOORS SHALL BE AS FOLLOWS: INTERIOR HINGED DOOR: 5.0 POUNDS, AND SLIDING OR FOLDING DOOR: 5.0 POUNDS. THESE FORCES DO NOT APPLY TO THE FORCE REQUIRED TO RETRACT LATCH BOLTS OR DISENGAGE OTHER DEVICES THAT HOLD THE DOOR IN A CLOSED POSITION. DOOR SURFACE: DOOR SURFACES WITHIN 10 INCHES OF THE FLOOR OR GROUND MEASURED VERTICALLY SHALL BE A SMOOTH SURFACE ON THE PUSH SIDE EXTENDING THE FULL WIDTH OF THE DOOR. PARTS CREATING HORIZONTAL OR VERTICAL JOINTS IN SUCH SURFACE SHALL BE WITHIN 1-1/16 INCH OF THE SAME PLANE AS THE OTHER. CAVITIES CREATED BY ADDED KICK PLATES SHALL BE CAPPED. EXCEPT FOR SLIDING DOORS, TEMPERED GLASS DOORS WITHOUT STILES AND HAVING A BOTTOM RAIL OR SHOE WITH THE TOP LEADING EDGE TAPERED AT NO LESS THAN 60 DEGREES FROM THE HORIZONTAL SHALL NOT BE REQUIRED TO MEET THE 10 INCH BOTTOM RAIL HEIGHT REQUIREMENT, AND DOORS WHICH DO NOT EXTEND TO WITHIN 10 INCHES OF THE FLOOR OR GROUND. VISION LITES: DOORS AND SIDELITES ADJACENT TO DOORS CONTAINING ONE OR MORE GLAZING PANELS THAT PERMIT VIEWING THROUGH THE PANELS SHALL HAVE THE BOTTOM OF AT LEAST ONE PANEL 43 INCHES MAX. ABOVE THE FLOOR OR GROUND.

WHEELCHAIR ACCESSIBLE PUBLIC TELEPHONES (ICC/ANSI SECTION 704): CLEAR FLOOR OR GROUND SPACE: A 30" X 48" CLEAR FLOOR OR GROUND SPACE SHALL BE PROVIDED. THE CLEAR FLOOR OR GROUND SPACE SHALL NOT BE RESTRICTED BY BASES, ENCLOSURES, OR FIXED SEATS. WHERE A PARALLEL APPROACH IS PROVIDED, THE DISTANCE FROM THE EDGE OF THE TELEPHONE ENCLOSURE TO THE FACE OF THE TELEPHONE UNIT SHALL BE 10 INCHES MAX. WHERE A FORWARD APPROACH IS PROVIDED, THE DISTANCE FROM THE FRONT EDGE OF A COUNTER WITHIN THE ENCLOSURE TO THE FACE OF THE TELEPHONE UNIT SHALL BE 20 INCHES MAX. OPERABLE PARTS: THE HIGHEST OPERABLE PART OF THE TELEPHONE SHALL BE WITHIN THE REACH RANGES SPECIFIED IN SECTION 308. TELEPHONES SHALL HAVE PUSH BUTTON CONTROLS WHERE SERVICE FOR SUCH EQUIPMENT IS AVAILABLE. TELEPHONE DIRECTORIES: WHERE PROVIDED, TELEPHONE DIRECTORIES SHALL COMPLY WITH ICC/ANSI SECTION 309. CORD LENGTH: WHEELCHAIR ACCESSIBLE TELEPHONES SHALL BE EQUIPPED WITH A HANDSET CORD LENGTH OF 29 INCHES MIN. VOLUME-CONTROL TELEPHONES: TELEPHONES WITH VOLUME CONTROL SHALL BE EQUIPPED WITH A RECEIVE VOLUME CONTROL WITH A RANGE THAT PROVIDES 12 DB OF GAIN MIN. AND 20 DB OF GAIN MAX. AN AUTOMATIC RESET SHALL BE PROVIDED. TELEPHONES SHALL BE HEARING AID COMPATIBLE. TTY: WHERE USED WITH A PAY TELEPHONE, TEXT TELEPHONES SHALL BE PERMANENTLY AFFIXED WITHIN, OR ADJACENT TO, THE TELEPHONE ENCLOSURE. IF AN ACOUSTIC COUPLER IS USED, THE TELEPHONE CORD SHALL BE SUFFICIENTLY LONG TO ALLOW CONNECTION OF THE TTY AND THE TELEPHONE RECEIVER. WHERE PAY TELEPHONES DESIGNED TO ACCOMMODATE A PORTABLE TTY ARE PROVIDED, THEY SHALL BE EQUIPPED WITH A SHELF AND AN ELECTRICAL OUTLET WITHIN OR ADJACENT TO THE TELEPHONE ENCLOSURE. THE TELEPHONE HANDSET SHALL BE CAPABLE OF BEING PLACED FLUSH ON THE SURFACE OF THE SHELF. THE SHELF SHALL BE CAPABLE OF ACCOMMODATING A TTY AND SHALL HAVE A 6 INCHES HIGH MIN. VERTICAL CLEARANCE ABOVE THE AREA WHERE THE TTY IS PLACED.

DRINKING FOUNTAINS AND WATER COOLERS (ICC/ANSI SECTION 602): CLEAR FLOOR OR GROUND SPACE: A 30" X 48" CLEAR FLOOR OR GROUND SPACE SHALL BE PROVIDED. WHERE A FORWARD APPROACH IS PROVIDED, THE CLEAR FLOOR OR GROUND SPACE SHALL BE CENTERED ON THE UNIT AND SHALL INCLUDE KNEE AND TOE CLEARANCE. WHERE A PARALLEL APPROACH IS PROVIDED, THE CLEAR FLOOR OR GROUND SPACE SHALL BE CENTERED ON THE UNIT. SPOUT HEIGHT AND LOCATION: SPOUT OUTLETS SHALL BE 36 INCHES MAX. ABOVE THE FLOOR OR GROUND. UNITS WITH A PARALLEL APPROACH SHALL HAVE THE SPOUT 3-1/2 INCHES MAX. FROM THE FRONT EDGE OF THE UNIT, INCLUDING BUMPERS. UNITS WITH A FORWARD APPROACH SHALL HAVE THE SPOUT 15 INCHES MIN. FROM THE VERTICAL SUPPORT AND 5 INCHES MAX. FROM THE FRONT EDGE OF THE UNIT, INCLUDING BUMPERS. OPERABLE PARTS SHALL COMPLY WITH ICC/ANSI SECTION 309 AND PROTRUDING UNITS SHALL COMPLY WITH ICC/ANSI SECTION 307.

TOILET ROOMS AND WATER CLOSETS (ICC/ANSI SECTIONS 603 AND 604): WHEELCHAIR TURNING SPACE: A CIRCULAR 60" DIAMETER WHEELCHAIR TURNING SPACE OR A "T" SHAPED TURNING SPACE COMPLYING WITH ICC/ANSI SECTION 304 SHALL BE PROVIDED WITHIN THE ROOM. DOORS: DOORS SHALL NOT SWING INTO THE CLEAR FLOOR OR GROUND SPACE OR CLEARANCE FOR ANY FIXTURE EXCEPT WHERE THE ROOM IS FOR INDIVIDUAL USE AND A 30" X 48" CLEAR FLOOR OR GROUND SPACE IS PROVIDED WITHIN THE ROOM, BEYOND THE ARC OF THE DOOR SWING. LOCATION: THE WATER CLOSET SHALL BE POSITIONED WITH A WALL OR PARTITION TO THE REAR AND TO ONE SIDE. THE CENTERLINE OF THE WATER CLOSET SHALL BE 16 INCHES MIN. TO 18 INCHES MAX. FROM THE SIDE WALL OR PARTITION. WATER CLOSET CLEAR SPACE: CLEARANCE AROUND THE WATER CLOSET SHALL BE 60 INCHES MIN., MEASURED PERPENDICULAR FROM THE SIDE WALL, AND 56 INCHES MIN., MEASURED PERPENDICULAR FROM THE REAR WALL. NO OTHER FIXTURES OR OBSTRUCTIONS SHALL BE WITHIN THE WATER CLOSET CLEARANCE. OVERLAP: THE CLEARANCE AROUND THE WATER CLOSET SHALL BE PERMITTED TO OVERLAP THE WATER CLOSET, ASSOCIATED GRAB BARS, TISSUE DISPENSERS, ACCESSIBLE ROUTES, AND CLEAR FLOOR OR GROUND SPACE, OR CLEARANCES AT OTHER FIXTURES AND THE WHEELCHAIR TURNING SPACE. WATER CLOSET HEIGHT AND CONTROLS: THE TOP OF WATER CLOSET SEATS SHALL BE 17 INCHES MIN. AND 19 INCHES MAX. ABOVE THE FLOOR OR GROUND. SEATS SHALL NOT RETURN AUTOMATICALLY TO A LIFTED POSITION. FLUSH CONTROLS SHALL BE HAND OPERATED OR AUTOMATIC. HAND-OPERATED FLUSH CONTROLS SHALL COMPLY WITH ICC/ANSI SECTION 309. GRAB BARS: GRAB BARS SHALL BE PROVIDED ON THE REAR WALL AND ON THE SIDE WALL CLOSEST TO THE WATER CLOSET. SIDE WALL GRAB BAR SHALL BE 42 INCHES LONG MIN., 12 INCHES MAX. FROM THE REAR WALL AND EXTENDING 54 INCHES MIN. FROM THE REAR WALL. THE REAR WALL GRAB BAR SHALL BE 36 INCHES LONG MIN. IN LENGTH, AND EXTEND FROM THE CENTERLINE OF THE WATER CLOSET 12 INCHES MINIMUM ON THE SIDE CLOSEST TO THE WALL, AND 24 INCHES MINIMUM ON THE TRANSFER SIDE. DISPENSERS: TOILET PAPER DISPENSERS SHALL BE 7 INCHES MIN. AND 9 INCHES MAX. IN FRONT OF THE WATER CLOSET. THE OUTLET OF THE DISPENSER SHALL BE 15 INCHES MIN. AND 48 INCHES MAX. ABOVE THE FLOOR OR GROUND. THERE SHALL BE A CLEARANCE OF 1-1/2 INCHES MIN. BELOW AND 12 INCHES MIN. ABOVE THE GRAB BAR. DISPENSERS SHALL NOT BE OF A TYPE THAT CONTROL DELIVERY, OR THAT DO NOT ALLOW CONTINUOUS PAPER FLOW. MIRRORS: MIRRORS SHALL BE MOUNTED WITH THE BOTTOM EDGE OF THE REFLECTING SURFACE 40 INCHES MAX. ABOVE THE FLOOR OR GROUND. COAT HOOKS AND SHELVES: COAT HOOKS PROVIDED WITHIN TOILET ROOMS SHALL ACCOMMODATE A FORWARD REACH OR SIDE REACH COMPLYING WITH ICC/ANSI SECTION 308. WHERE PROVIDED, A FOLD-DOWN SHELF SHALL BE 40 INCHES MIN. AND 48 INCHES MAX. ABOVE THE FLOOR OR GROUND.

TOILET COMPARTMENTS FOR MULTI-TOILET ROOMS (ICC/ANSI SECTION 604): WHEELCHAIR ACCESSIBLE COMPARTMENTS: WHEELCHAIR ACCESSIBLE COMPARTMENTS SHALL BE 60 INCHES WIDE MIN. MEASURED PERPENDICULAR TO THE SIDE WALL, AND 56 INCHES DEEP MIN. FOR WALL HUNG WATER CLOSETS AND 59 INCHES DEEP MIN. FOR FLOOR MOUNTED WATER CLOSETS, MEASURED PERPENDICULAR TO THE REAR WALL. GRAB BARS FOR WHEELCHAIR ACCESSIBLE COMPARTMENTS: A 42" SIDE WALL GRAB BAR SHALL BE PROVIDED ON THE WALL CLOSEST TO THE WATER CLOSET. A 24" OR 36" REAR-WALL GRAB BAR SHALL BE PROVIDED. A 18" VERTICAL GRAB BAR SHALL BE PROVIDED ON SIDE WALL CLOSEST TO THE WATER CLOSET AMBULATORY ACCESSIBLE COMPARTMENTS: AMBULATORY ACCESSIBLE COMPARTMENTS SHALL BE 60 INCHES DEEP MIN. AND 36 INCHES WIDE. COMPARTMENT DOORS SHALL NOT SWING INTO THE MIN. REQUIRED COMPARTMENT AREA. THE WATER CLOSET SHALL BE CENTERED IN THE COMPARTMENT. GRAB BARS FOR AMBULATORY ACCESSIBLE COMPARTMENTS: A 42" SIDE WALL GRAB BAR SHALL BE PROVIDED ON BOTH SIDES OF THE COMPARTMENT. DOORS: COMPARTMENT DOORS SHALL NOT SWING INTO THE MIN. REQUIRED COMPARTMENT AREA. TOILET COMPARTMENT DOORS SHALL COMPLY WITH ICC/ANSI SECTION 404, EXCEPT THAT IF THE APPROACH IS TO THE LATCH SIDE OF THE COMPARTMENT DOOR, THE CLEARANCE BETWEEN THE DOOR SIDE OF THE COMPARTMENT AND ANY OBSTRUCTION SHALL BE 42 INCHES MIN. THE DOOR SHALL BE HINGED 4 INCHES MAX. FROM THE ADJACENT WALL OR PARTITION FARTHEST FROM THE WATER CLOSET. THE DOOR SHALL BE SELF-CLOSING. A DOOR PULL SHALL BE PLACED ON BOTH SIDES OF THE DOOR NEAR THE LATCH. COMPARTMENT ARRANGEMENTS SHALL BE PERMITTED FOR LEFT-HAND OR RIGHT-HAND APPROACH TO THE WATER CLOSET. TOE CLEARANCE: IN WHEELCHAIR ACCESSIBLE COMPARTMENTS, THE FRONT PARTITION AND AT LEAST ONE SIDE PARTITION SHALL PROVIDE A TOE CLEARANCE EXTENDING 6 INCHES DEEP BEYOND THE COMPARTMENT-SIDE FACE OF THE PARTITION, EXCLUSIVE OF PARTITION SUPPORT MEMBERS. TOE CLEARANCE AT THE FRONT OF THE PARTITION IS NOT REQUIRED IN A COMPARTMENT GREATER THAN 62 INCHES DEEP WITH A WALL-HUNG WATER CLOSET OR 65 INCHES DEEP WITH A FLOOR-MOUNTED WATER CLOSET. TOE CLEARANCE AT THE SIDE PARTITION IS NOT REQUIRED IN A COMPARTMENT GREATER THAN 66 INCHES WIDE.

URINALS (ICC/ANSI SECTION 605): HEIGHT AND CONTROLS: URINALS SHALL BE OF THE STALL TYPE OR SHALL BE OF THE WALL-HUNG TYPE WITH THE RIM AT 17 INCHES MAX. ABOVE THE FLOOR OR GROUND. FLUSH CONTROLS SHALL BE HAND OPERATED OR AUTOMATIC. CLEAR FLOOR OR GROUND SPACE: A 30" X 48" CLEAR FLOOR OR GROUND SPACE POSITIONED FOR FORWARD APPROACH SHALL BE PROVIDED.

LAVATORIES AND SINKS (ICC/ANSI SECTION 606): CLEAR FLOOR OR GROUND SPACE: A 30" X 48" CLEAR FLOOR OR GROUND SPACE, POSITIONED FOR FORWARD APPROACH, SHALL BE PROVIDED. KNEE AND TOE CLEARANCE SHALL BE PROVIDED. HEIGHT AND CLEARANCES: THE FRONT OF LAVATORIES AND SINKS SHALL BE 34 INCHES MAX. ABOVE THE FLOOR OR GROUND, MEASURED TO THE HIGHER OF THE FIXTURE RIM OR COUNTER SURFACE. FAUCETS SHALL COMPLY WITH ICC/ANSI SECTION 309. HAND-OPERATED, SELF-CLOSING FAUCETS SHALL REMAIN OPEN FOR 10 SECONDS MIN. BOWL DEPTH SHALL BE 6-1/2 INCHES DEEP MAX. MULTIPLE COMPARTMENT SINKS SHALL HAVE AT LEAST ONE COMPARTMENT COMPLYING WITH THIS REQUIREMENT. EXPOSED PIPES AND SURFACES: WATER SUPPLY AND DRAINPIPES UNDER LAVATORIES AND SINKS SHALL BE INSULATED OR OTHERWISE CONFIGURED TO PROTECT AGAINST CONTACT. THERE SHALL BE NO SHARP OR ABRASIVE SURFACES UNDER LAVATORIES AND SINKS.

GRAB BARS (ICC/ANSI SECTION 609): SIZE. GRAB BARS SHALL HAVE A CIRCULAR CROSS SECTION WITH A DIAMETER OF 1-1/4 INCH MIN. AND 2 INCHES MAX. GRAB BARS WITH OTHER SHAPES SHALL BE PERMITTED PROVIDED THEY HAVE A PERIMETER DIMENSION OF 4 INCHES MIN. AND 4.8 INCHES MAX. AND WITH EDGES HAVING 1/8 INCH MIN. RADIUS. SPACING: THE SPACE BETWEEN THE WALL AND THE GRAB BAR SHALL BE 1-1/2 INCHES. THE SPACE BETWEEN THE GRAB BAR AND OBJECTS BELOW AND AT THE ENDS SHALL BE 1-1/2 INCHES MIN. THE SPACE BETWEEN THE GRAB BAR AND PROJECTING OBJECTS ABOVE SHALL BE 15 INCHES MIN. POSITION OF GRAB BARS: GRAB BARS SHALL BE MOUNTED IN A HORIZONTAL POSITION, 33 INCHES MIN. AND 36 INCHES MAX. ABOVE THE FLOOR TO THE TOP OF THE GRIPPING SURFACE. SURFACE HAZARDS: GRAB BARS AND ANY WALL OR OTHER SURFACES ADJACENT TO GRAB BARS SHALL BE FREE OF SHARP OR ABRASIVE ELEMENTS. EDGES SHALL HAVE A RADIUS OF 1/8 INCH MIN. GRAB BARS SHALL NOT ROTATE WITHIN THEIR FITTINGS. INSTALLATION: GRAB BARS SHALL BE INSTALLED IN ANY MANNER THAT PROVIDES A GRIPPING SURFACE AT THE LOCATIONS SPECIFIED IN THIS STANDARD AND THAT DOES NOT OBSTRUCT THE CLEAR FLOOR SPACE. STRUCTURAL STRENGTH: ALLOWABLE STRESSES IN BENDING, SHEAR, AND TENSION SHALL NOT BE EXCEEDED FOR MATERIALS USED WHERE A VERTICAL OR HORIZONTAL FORCE OF 250 POUNDS IS APPLIED AT ANY POINT ON THE GRAB BAR, FASTENER MOUNTING DEVICE, OR SUPPORTING STRUCTURE.

RECEIVED
APR 12 2012
DEVELOPMENT SERVICES
COUNTER

7855
REGISTERED ARCHITECT
Pedro A. de Magalhaes Castro
STATE OF WASHINGTON

Copyright © 2012 Magellan Associates PLLC
All rights reserved. The documents prepared by the Architect for this project are instruments of the Architect's service for use solely with respect to this project.
No part of this plan may be copied, reproduced, or transmitted in any form or by any means, electronic or mechanical (including photocopying, recording, or any information retrieval system), without the express written approval of Magellan Associates PLLC. No derivative works of this plan may be made without prior written permission. The purchase of this set of plans entitles the purchaser to use this set of plans for the construction of only one building. The purchase of additional set(s) of plans does not entitle the purchaser to construct more than one building.

Magellan
ARCHITECTS
8383 158th Avenue Northeast, Suite 280
Redmond, Washington 98052
Tel (425) 885-4300 Fax (425) 885-4303
www.magellanarchitects.com

BARTELL DRUGS
Washington's Own Drugstores

BARTELL EDMONDS #58
TENANT IMPROVEMENT

23028 100TH AVE W
EDMONDS, WASHINGTON 98020

REVISIONS		
NO.	DATE	BY
△		
△		
△		
△		
△		
△		

ISSUE DATES	
DESIGN APPROVAL:	
PERMIT SUBMITTAL:	4/11/12
PERMIT RECEIVED:	
BID DOCS:	
CONSTR. DOCS:	

24"x36" SCALE:	AS NOTED
PLOT DATE:	4/11/12
CAD FILE:	12-030A02
JOB NUMBER:	12-030
CHECKED:	DYM
DRAWN:	BC
STATUS:	PERMIT

ICC/ANSI GEN. CODE NOTES

A0.2

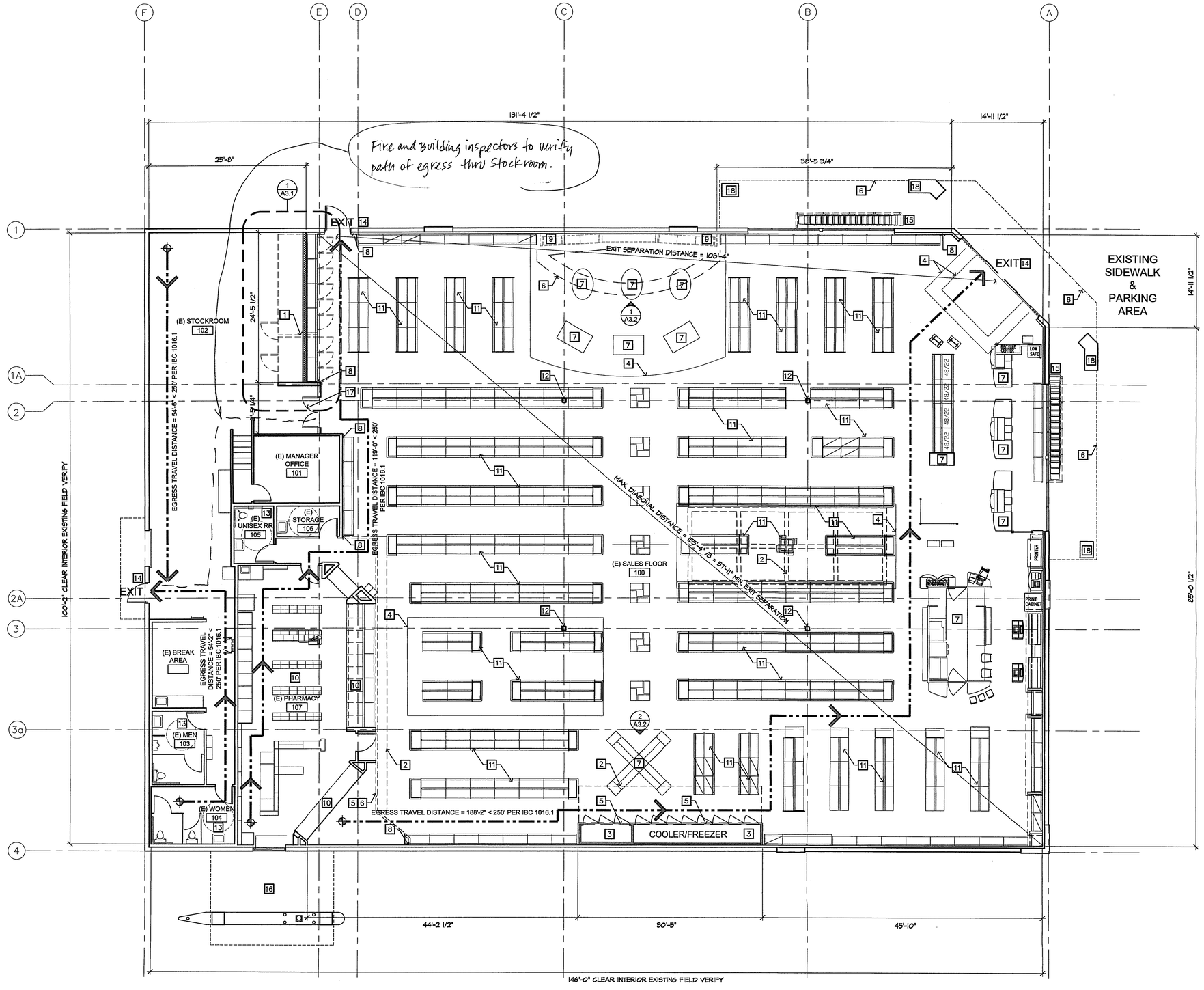

FLOOR PLAN & EGRESS PLAN - EXISTING & PROPOSED

1/8" = 1'-0"

KEY NOTES

1. DEMOLITION SHOWN ON ENLARGED PLAN, SEE SHEET 1/A3.1
2. MERCHANDISING ELEMENT BY OTHERS HUNG ABOVE PER REFLECTED CEILING PLAN A2.2
3. NEW REACH-IN COOLER/FREEZER, F.O.I.O. OVERALL ASSEMBLY TO BE 30'-5" LONG X 3'-8" DEEP. INSTALL GLASS DOORS AFTER GWB IS INSTALLED AT FRONT OF UNITS.
4. FLOOR FINISH DELINEATION. CHANGES BY OWNER.
5. INSTALL PLYWOOD BACKING TO ACCOMMODATE MERCHANDISING INSTALLATION.
6. LINE OF SOFFIT ABOVE
7. FREESTANDING MERCHANDISING AND/OR POINT OF SALE FIXTURE BY OWNER VENDOR. ENSURE ADA CLEARANCE AT ALL ADJACENT DOORS. FINAL RETAIL FIXTURE LAYOUT TO BE CONFIRMED WITH OWNER PRIOR TO FLOORING INSTALL
8. INSTALL RUBBER BASE ON EXPOSED WALLS AND NOT BEHIND THE FIXTURES, TYP.
9. NEW BUILT-IN COSMETIC PRODUCT SHELVING BY OWNER-VENDOR. LIGHTING AND ELECTRICAL BY OTHERS
10. ALL PHARMACY FIXTURES EXISTING TO REMAIN IN PLACE
11. NEW MERCHANDISING FIXTURES BY OWNER, TYP, U.O.N.
12. 5'-0" STAINLESS STEEL COLUMN WRAPS AT ALL EXISTING STRUCTURAL COLUMNS
13. NO CHANGES TO EXISTING RESTROOM
14. NO CHANGES TO EXISTING EXIT
15. NEW CART CORRAL AT BUILDING EXTERIOR, F.O.I.C.
16. NO CHANGES TO EXISTING DRIVE UP
17. EXISTING STOCKROOM DOOR TO REMAIN
18. EXISTING EXTERIOR COLUMN, NO CHANGES PROPOSED

FLOOR PLAN NOTES

A. ALL DIMENSIONS ARE TO FACE OF EXISTING WALL, CENTERLINE OF DOOR, AND INSIDE LINE OF MTL. STUD WALL.

B. FINISH FLOOR REFERENCE DATUM EQUALS (0'-0").

C. PROVIDE PORTABLE FIRE EXTINGUISHERS AS REQUIRED BY THE FIRE DEPARTMENT.

D. PROVIDE FIRE ALARM AND DETECTION SYSTEMS AS REQUIRED BY THE FIRE MARSHAL.

E. EXPOSED INSULATION MATERIALS INCLUDING FACINGS AND VAPOR BARRIERS, SHALL HAVE A FLAME SPREAD RATING NOT TO EXCEED 25, AND A SMOKE DENSITY NOT TO EXCEED 450, OR SHALL BE IN SUBSTANTIAL CONTACT WITH THE WALL OR CEILING SURFACE FINISH.

F. AISLES SHALL BE PROVIDED AND MAINTAINED IN ALL PORTIONS OF THE BUILDING TO REQUIRED EXITS: 36" MIN. IN WIDTH WHEN OBSTRUCTIONS ARE PLACED ON ONE SIDE, AND 44" IN WIDTH WHEN OBSTRUCTIONS ARE ON TWO SIDES.

G. EXPOSED CORNERS ON SALES AREA WALLS TO BE PROTECTED BY 4'-0" HIGH, 2" STAINLESS STEEL CORNER GUARD PER STORE SPEC.

H. ALL PLUMBING PIPING TO BE INSULATED – 1/2" OR MORE ON COLD AND 1" OR MORE ON HOT WATER LINES.

I. ALL IN-GROUND WATER PIPE AND JOINTS SHALL BE COATED WITH SCOTCH WRAP IN 1/2 LAPPED LAYERS.

LEGEND

BEGINNING POINT OF EGRESS TRAVEL

PATH OF EGRESS

EXISTING INTERIOR FRAMING. PROVIDE SMOOTH TRANSITION AND EQUAL ADJACENT FINISHES WHERE MEETS NEW FRAMING. PROVIDE FURRING STRIPS WHERE REQUIRED FOR FLUSH SURFACE.

NEW FULL HEIGHT FRAMING: 3 5/8", 6" MTL STUDS (PER PLUMBING REQUIREMENTS), OR OTHER DIMENSION AT INFILL TO MATCH DEPTH OF EXISTING WALL, 20 GA, AT 16" O.C. W/ 5/8" TYPE 'X' GWB EACH SIDE. TO UNDERSIDE OF STRUCTURAL ABOVE. PROVIDE ACOUSTIC INSULATION TO CEILING LEVEL U.O.N. (2/A6.1)

FREEZER WALLS (BY OTHERS)

WALLS, EQUIPMENT AND OTHER SURFACES TO BE DEMOLISHED, U.O.N.

RECEIVED
APR 12 2012
DEVELOPMENT SERVICES COUNTER

WALL LEGEND NOTES:

1. PROVIDE WATER RESISTANT TYPE 'X' GWB IN ALL WET AREAS, AND BLOCKING BEHIND ALL FIXTURES.
2. NEW WALLS IN STOCKROOM SAND AND TAPED WITH PRIMER COAT.

7855
REGISTERED ARCHITECT
Pedro Fernando Magalhães Castro
STATE OF WASHINGTON

Copyright © 2012 Magellan Associates PLLC
All rights reserved. The documents prepared by the Architect for this project are instruments of the Architect's service for use solely with respect to this project. All such documents, including this plan, may be copied, reproduced, or transmitted in any form or by any means, recording, or any information retrieval system, without the express written consent of Magellan Associates PLLC. No derivative works of this plan may be created without express written consent. The purchase of this set of plans entitles the purchaser to use the plans for the construction of only one building. The purchase of additional sets of plans does not entitle the purchaser to a license to use the plans.

Magellan ARCHITECTS
8383 158th Avenue Northeast, Suite 280
Redmond, Washington 98052
Tel (425) 885-4300 Fax (425) 885-4303
www.magellanarchitects.com

BARTELL DRUGS
Washington's Own Drugstores

BARTELL EDMONDS #58 TENANT IMPROVEMENT

23028 100TH AVE W
EDMONDS, WASHINGTON 98020

REVISIONS		
NO.	DATE	BY
△		
△		
△		
△		
△		
△		

ISSUE DATES	
DESIGN APPROVAL:	
PERMIT SUBMITTAL:	4/11/12
PERMIT RECEIVED:	
BID DOCS:	
CONSTR. DOCS:	

24"x36" SCALE:	AS NOTED
PLOT DATE:	4/11/12
CAD FILE:	12-030A21
JOB NUMBER:	12-030
CHECKED:	DYM
DRAWN:	BC
STATUS:	PERMIT

FLOOR PLAN AND EGRESS PLAN

A2.1

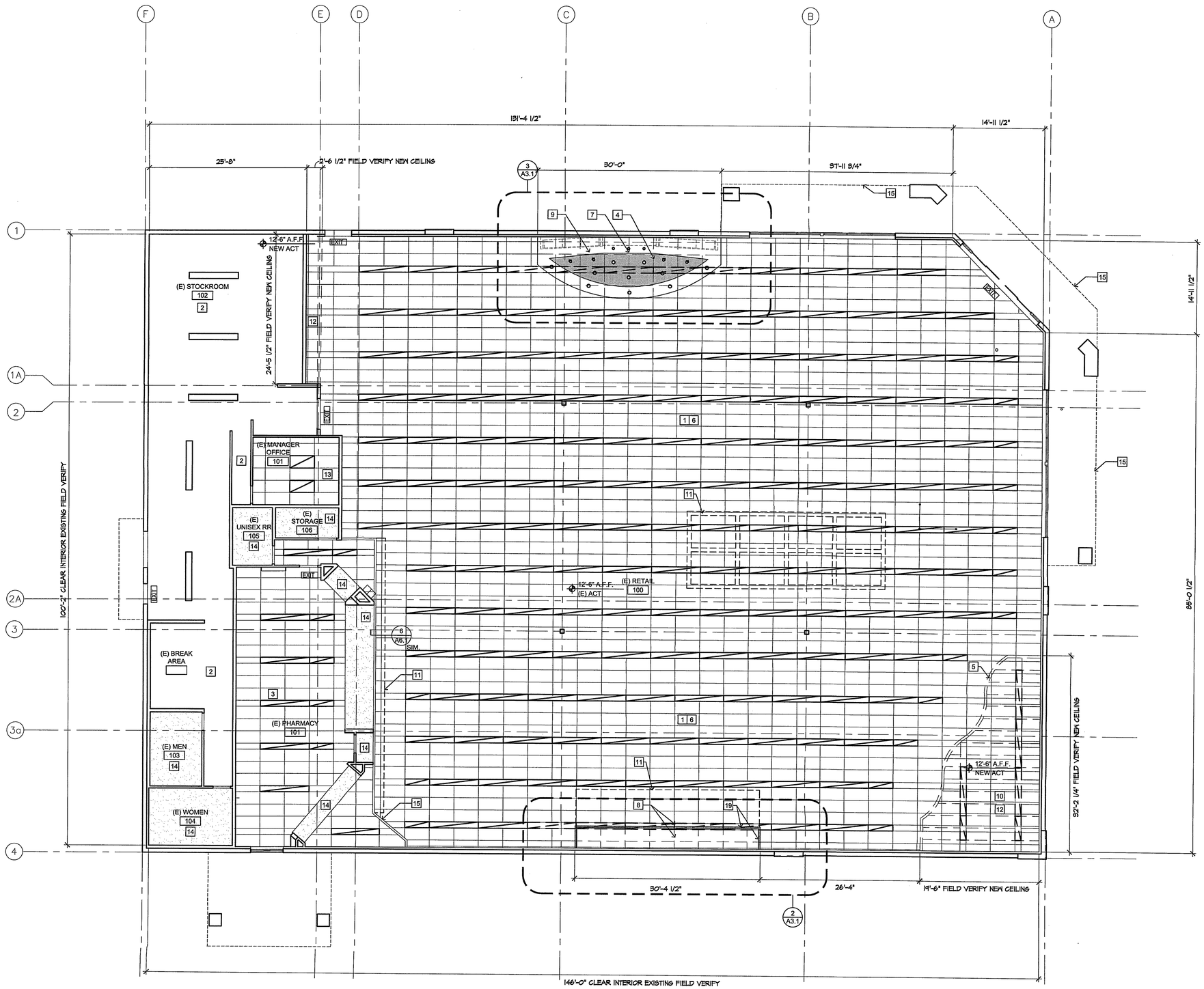

REFLECTED CEILING PLAN

1/8" = 1'-0"

KEY NOTES

1. EXISTING 2X4 A.C.T. @ 12'-6" A.F.F., TYPICAL U.O.N. PATCH AND REPAIR/REPLACE TO MATCH EXISTING AS REQUIRED.
2. OPEN TO STRUCTURE ABOVE
3. NO CHANGES AT PHARMACY CEILING PROPOSED
4. FIRE SPRINKLER HEADS AT COSMETIC WALL SOFFIT TO BE RELOCATED LOWER INTO SOFFIT UNDER DEFERRED SUBMITTAL
5. DEMOLISH EXISTING PHOTO AREA SOFFIT/BULKHEAD
6. ALL SPRINKLER HEADS TO REMAIN, NOT SHOWN ON PLAN
7. AT "FRESH BEAUTY" COSMETIC SOFFIT INSTALLATION, ACT GRID AND TILE TO REMAIN. ALL EXISTING 2X4 LIGHT FIXTURES (QTY. 8) ADJACENT TO INSTALLATION TO BE REMOVED. SPRINKLER HEADS TO RELOCATE INTO NEW SOFFIT PER DEFERRED SUBMITTAL DRAWINGS.
8. EXISTING GRID, TILE, AND LIGHT FIXTURES TO BE REMOVED TO ACCOMMODATE NEW FRAMING AND/OR COOLER INSTALLATION
9. NEW SUSPENDED SOFFIT FIXTURE BY OWNER VENDOR. SOFFIT PERIMETER AND INFILL CEILING MATERIAL, AS WELL AS UL CONNECTIONS FOR LIGHTING TO BE FABRICATED OFF-SITE AND INSTALLED AS CASEWORK COMPONENT HUNG FROM ROOF STRUCTURE.
10. DEMOLISH CEILING GRID AND LIGHT FIXTURES AT EXISTING PHOTO/FILM LOCATION
11. CEILING AND/OR WALL HUNG LIGHT WEIGHT MERCHANDISING/ SIGNAGE COMPONENT BY OWNER VENDOR. SHOWN FOR REFERENCE ONLY. VERIFY HANGING HEIGHT WITH OWNER.
12. INSTALL NEW ACOUSTIC CEILING TILE AND GRID TO MATCH MAIN RETAIL FIELD HEIGHT AND FINISH.
13. NO CHANGE TO CEILING AT MANAGER OFFICE
14. EXISTING GWB CEILING TO REMAIN
15. EXISTING SOFFIT TO REMAIN
16. FRAMING ABOVE COOLER/FREEZER WALLS TO STRUCTURE ABOVE.

CEILING PLAN LEGEND

- (E) 1' LAY-IN FLUORESCENT RECESSED FIXTURE TO REMAIN (4' OR 8' LENGTH, FIELD VERIFY)
- (E) 1' LAY-IN FLUORESCENT RECESSED FIXTURE TO BE DEMOLISHED (4' OR 8' LENGTH, FIELD VERIFY)
- (E) HIGH BAY STOCK ROOM FIXTURE TO REMAIN
- EXIT — EXISTING ILLUMINATED EXIT SIGN TO REMAIN

FIRE SPRINKLER DESIGN/ BUILD NOTES

A. FIRE ALARM CONTRACTOR TO PROVIDE DRAWINGS WITH THE LOCATION OF ALL AUDIBLE AND VISIBLE FIRE ALARM DEVICES WITH THE DESIGN/BUILD SUBMITTAL . UFC 1007, WAC 31-30, SECTIONS 1105.4.9 & 1106.15. RE-USE EXISTING OR LOCATE NEW F/A PANEL NEXT TO SPRINKLER RISER

B. AUTOMATIC SPRINKLER PLANS MUST BE SUBMITTED TO AND APPROVED BY THE CITY.

C. SPRINKLER SYSTEM TO BE MONITORED FOR WATER FLOW AND TAMPER CONDITIONS BY A U.L. LISTED CENTRAL STATION. MONITORING AND SET UP OF CENTRAL STATION TO BE BY OWNER. TAMPER SWITCHES SHALL BE INSTALLED ON ALL VALVES CAPABLE OF SHUTTING OFF ANY PORTION OF THE SYSTEM. THE CENTRAL STATION SHALL BE ONE APPROVED BY THE CITY.

D. SPRINKLER SYSTEM TO HAVE BOTH INTERIOR AND EXTERIOR AUDIBLE ALARMS. PER UBC 904.2.

E. SPRINKLER SYSTEM TO HAVE HEADS MODIFIED FOR NEW REFLECTED CEILING PLAN AND HEIGHTS.

CEILING PLAN NOTES

A. COORDINATE THE WORK OF ALL TRADES INVOLVED IN THE CEILING WORK TO ENSURE CLEARANCES FOR FIXTURES, DUCTS, PIPING, CEILING SUSPENSION SYSTEM, ETC., NECESSARY TO MAINTAIN THE FINISHED CEILING HEIGHTS INDICATED ON ARCHITECTS DWGS.

B. FURNISH AND INSTALL ALL ASSOCIATED TRIM AND SEISMIC BRACING AS REQUIRED.

C. LIGHT FIXTURES, NEW SPRINKLERS AND OTHER CEILING ELEMENTS SHALL BE CENTERED IN THE 2'X2' SECTION OF INDIVIDUAL CEILING TILES U.O.N. (EXIST. SPRINKLERS TO REMAIN UNLESS CONFLICT WITH NEW ELEMENTS).

D. ALL SWITCHES AND DIMMERS SHALL BE LOCATED 46" ABOVE FINISHED FLOOR TO CENTER OF SWITCH U.O.N. MULTIPLE SWITCHES AT ONE LOCATION SHALL BE GANGED TOGETHER AND FINISHED WITH ONE COVER PLATE U.O.N.

E. ALL SOFFITS AND CEILING HEIGHTS ARE DIMENSIONED FROM TOP OF FINISHED FLOOR TO BOTTOM OF FINISHED GYPSUM BOARD OR CEILING TILE AND SHALL ALLOW FOR THICKNESS OF ALL FLOOR FINISHES.

F. THE REFLECTED CEILING PLAN INDICATES THE LOCATION OF CEILING HEIGHTS, LIGHT TYPES, LIGHT FIXTURES, AND ASSOCIATED ITEMS.

G. IN THE EVENT OF DISCREPANCIES BETWEEN THE ARCHITECTS REFLECTED CEILING PLAN AND LIGHTING PLAN, IMMEDIATELY NOTIFY THE ARCHITECT IN WRITING BEFORE ORDERING MATERIALS OR PROCEEDING WITH WORK.

H. ALL SPECIFIC INFORMATION CONCERNING INSTALLATION FOR VARIOUS ABOVE-CEILING ELEMENTS ARE TO BE DESIGN BUILD, DOCUMENTATION BY OTHERS (PERMITTED SEPARATELY).

I. VERIFY FIELD CONDITIONS AND LOCATIONS OF ALL PLUMBING, MECHANICAL DUCTS, STRUCTURAL ELEMENTS AND ALL OTHER RELATED ITEMS. INSTALL NEW PLUMBING, MECHANICAL, FANS, DUCTS, CONDUITS, AND OTHER RELATED ITEMS SO AS TO NOT CONFLICT WITH ANY/ALL FIELD CONDITIONS INCLUDING LUMINARIES.

J. INSTALL NEW LIGHT FIXTURES WITH PROTECTIVE FILM OR SIMILAR COVER OVER LOUVER, LENS, BAFFLE, ETC. TO AVOID FIXTURE SOILING OR DAMAGE, FIXTURES SHALL BE MAINTAINED CLEAN AND AS NEW, ALL LAMPS SHALL BE NEW AT PROJECT COMPLETION.

K. ALL EXITING LIGHTS AND EGRESS LIGHTING LOCATIONS ARE EXISTING TO REMAIN AND SHALL BE VERIFIED BY BUILDING AND FIRE INSPECTOR'S FIELD PLACEMENT DETERMINATION.

RECEIVED
APR 12 2012
DEVELOPMENT SERVICES

THIS REGISTERED ARCHITECT
Dennis de Magalhães Castro
STATE OF WASHINGTON

Copyright © 2012 Magellan Associates PLLC
All rights reserved. The design and information contained in this Architect's drawing is the property of the Architect, for this project and instruments of service, and is not to be used for any other purpose or reproduced in any form, or by photocopying, recording, or any other means, including photography, without the written approval of Magellan Architects PLLC. Reproduction of this drawing in any manner may be made without prior written permission. The purchaser of this set of plans for the construction of a single building, has the right to use the purchaser to use this set of plans for the construction of a single building. The purchase of additional set(s) of plans does not entitle the purchaser to construct more than one building.

Magellan ARCHITECTS
8383 150th Avenue Northeast, Suite 280
Redmond, Washington 98052
Tel (425) 885-4300 Fax (425) 885-4303
www.magellanarchitects.com

BARTELL DRUGS
Washington's Own Drugstores

BARTELL EDMONDS #58 TENANT IMPROVEMENT

23028 100TH AVE W
EDMONDS, WASHINGTON 98020

REVISIONS		
NO.	DATE	BY

ISSUE DATES	
DESIGN APPROVAL:	
PERMIT SUBMITTAL:	4/11/12
PERMIT RECEIVED:	
BID DOCS:	
CONSTR. DOCS:	

24"x36" SCALE:	AS NOTED
PLOT DATE:	4/11/12
CAD FILE:	12-030A22
JOB NUMBER:	12-030
CHECKED:	DYM
DRAWN:	BC
STATUS:	PERMIT

REFLECTED CEILING PLAN

A2.2

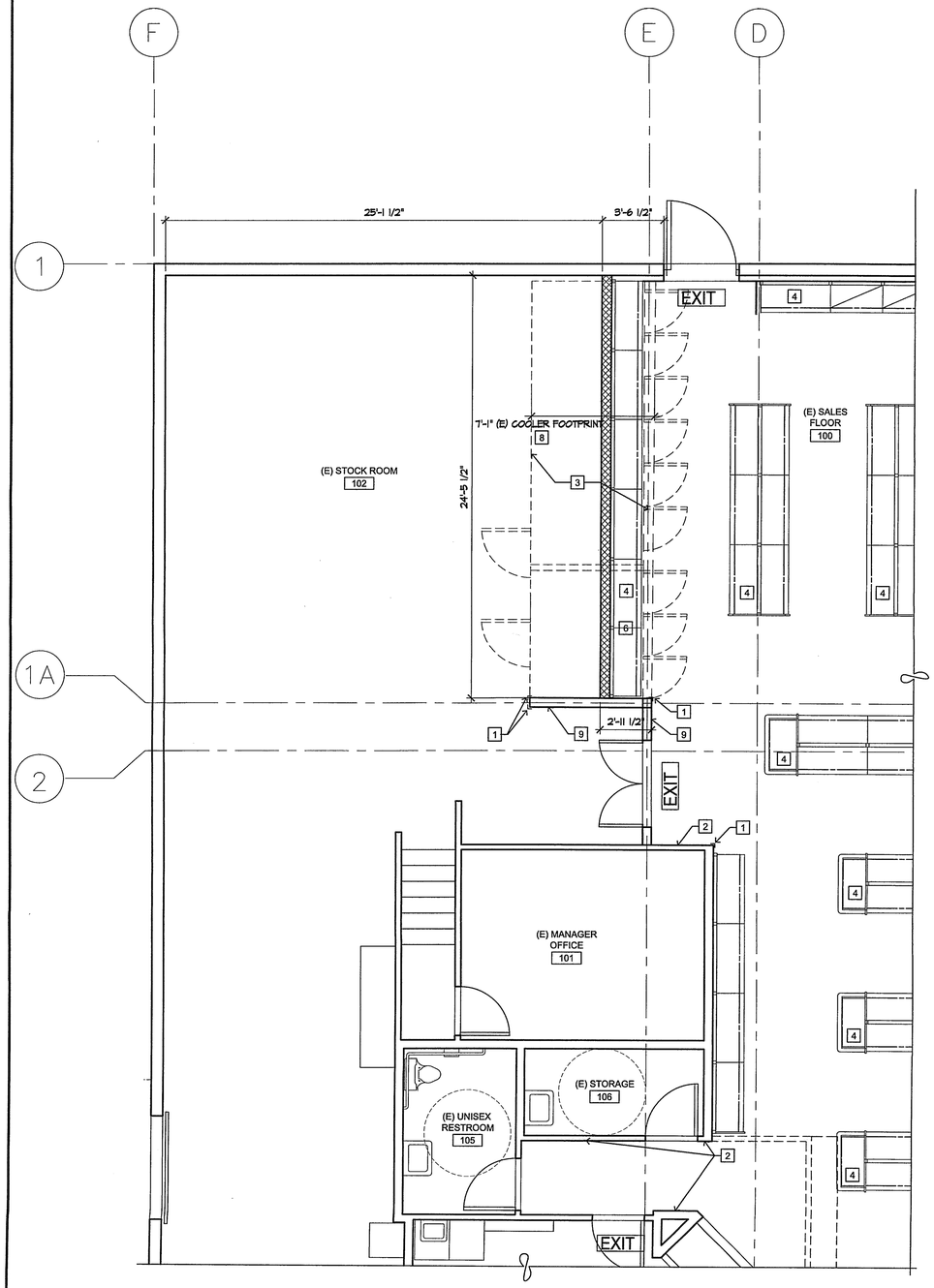

1 ENLARGED FLOOR PLAN
1/4" = 1'-0"

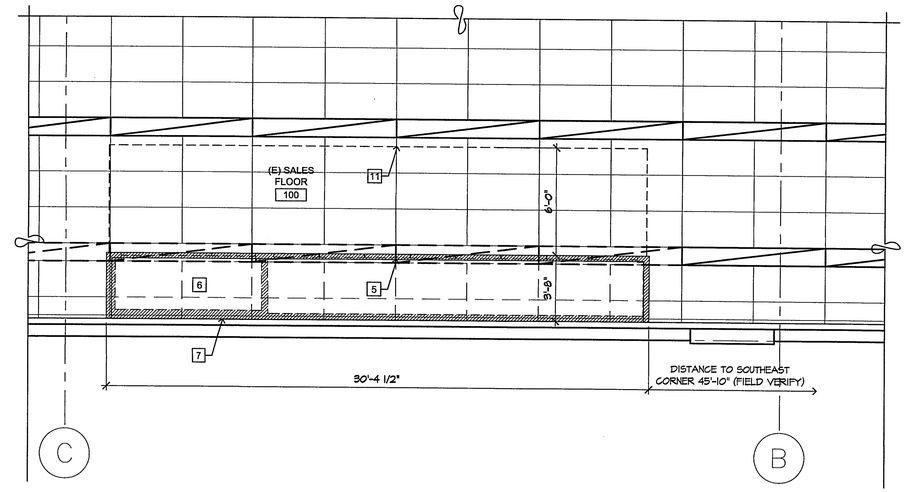

2 ENLARGED REFLECTED CEILING PLAN AT COOLER
1/4" = 1'-0"

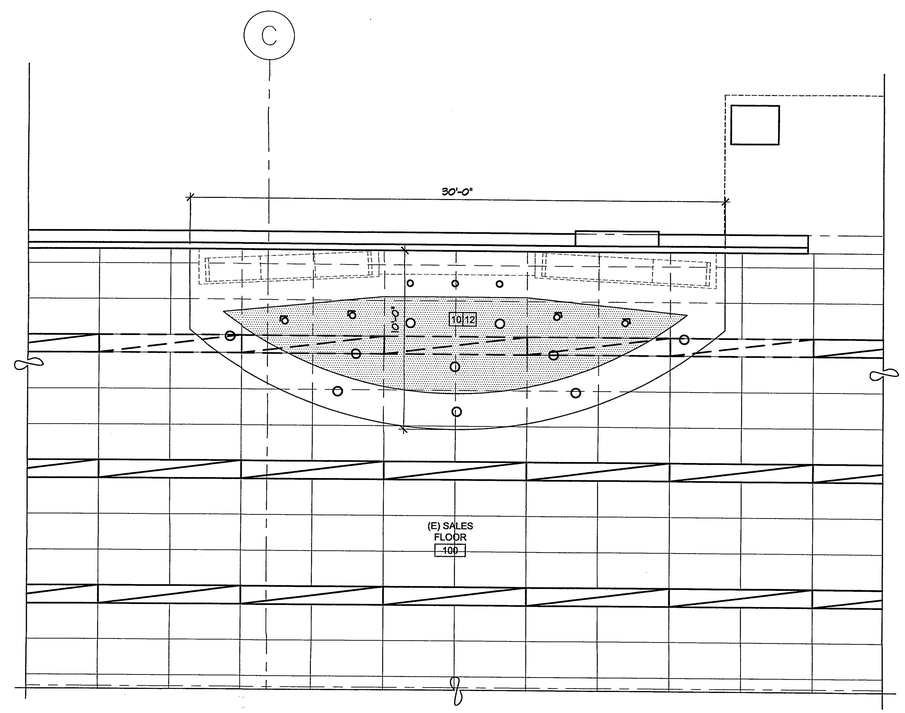

3 ENLARGED REFLECTED CEILING PLAN
1/4" = 1'-0"

KEY NOTES

1. 4'-0" STAINLESS STEEL CORNER GUARDS BY GC. TYP AT SALES FLOOR
2. REPLACE LAMINATE AT SALES FLOOR (WHERE OCCURS) WITH 4'-0" PL-2 WITH P-1 ABOVE PER FINISH SCHEDULE.
3. EXISTING COOLER PACKAGE (WALLS, FLOOR, DOORS, CEILING) TO BE REMOVED. REMOVE ANY FINISH FRAMING AND/OR GWB TO MAKE CLEAR OPENING FOR NEW WORK
4. SALES FIXTURE BY OWNER, TYP.
5. NO ACOUSTIC INSULATION REQUIRED AT FRAMING ABOVE FREEZER WALLS
6. AT (E) COOLER DEMO AND NEW COOLER/FREEZER INSTALLATION , DEMOLISH ACT GRID AND TILE, ALONG WITH LIGHT FIXTURES (FIELD VERIFY QTY). RECONFIGURE SPRINKLER HEADS AS REQUIRED PER DEFERRED SUBMITTAL.
7. DRAIN CONDENSATE THROUGH EXTERIOR WALL (PER DEFERRED MECHANICAL SUBMITTAL)
8. POUR BACK CONCRETE SLAB AT COOLER/FREEZER REMOVAL TO BE FLUSH WITH EXISTING SALES AND STOCKROOM FLOOR(S)
9. EXISTING FRAMING TO REMAIN. IF DAMAGED DUE TO COOLER REMOVAL, FRAME FULL HEIGHT TO MATCH EXISTING CONDITIONS.
10. AT "FRESH BEAUTY" COSMETIC SOFFIT INSTALLATION, ACT GRID AND TILE TO REMAIN. ALL EXISTING 1X8 LIGHT FIXTURES (FIELD VERIFY QTY) ADJACENT TO INSTALLATION TO BE REMOVED. SPRINKLER HEADS TO RELOCATE INTO NEW SOFFIT PER DEFERRED SUBMITTAL DRAWINGS.
11. LIGHTWEIGHT ALUMINUM MERCHANDISING CANOPY BY OWNER VENDOR. SHOWN FOR REFERENCE ONLY.
12. LIGHTING AT "FRESH BEAUTY" SOFFIT BY OWNER/VENDOR UNDER SEPARATE ELECTRICAL PERMIT.

WALL & CEILING LEGEND

EXISTING INTERIOR FRAMING. PROVIDE SMOOTH TRANSITION AND EQUAL ADJACENT FINISHES WHERE MEETS NEW FRAMING. PROVIDE FURRING STRIPS WHERE REQUIRED FOR FLUSH SURFACE.

2 A6.1 — NEW FULL HEIGHT FRAMING: 3 5/8", 6" MTL STUDS (PER PLUMBING REQUIREMENTS), OR OTHER DIMENSION AT INFILL TO MATCH DEPTH OF EXISTING WALL, 20 GA, AT 16" O.C. W/ 5/8" TYPE 'X' GWB EACH SIDE. TO UNDERSIDE OF STRUCTURAL ABOVE. PROVIDE ACOUSTIC INSULATION TO CEILING LEVEL U.O.N.

FREEZER WALLS (BY OTHERS)

WALLS, EQUIPMENT AND OTHER SURFACES TO BE DEMOLISHED, U.O.N.

WALL LEGEND NOTES:

1. PROVIDE WATER RESISTANT TYPE 'X' GWB IN ALL WET AREAS, AND BLOCKING BEHIND ALL FIXTURES.
2. NEW WALLS IN STOCKROOM SAND AND TAPED WITH PRIMER COAT.

(E) 1' LAY-IN FLUORESCENT RECESSED FIXTURE TO REMAIN (4' OR 8' LENGTH, FIELD VERIFY)

(E) 1' LAY-IN FLUORESCENT RECESSED FIXTURE TO BE DEMOLISHED (4' OR 8' LENGTH, FIELD VERIFY)

(E) HIGH BAY STOCK ROOM FIXTURE TO REMAIN

EXIT — ILLUMINATED EXIT SIGN MOUNTED TO UNDERSIDE OF MEZZANINE FLOOR STRUCTURE/BREAK AREA CEILING. EXISTING TO REMAIN WHERE NOTED

RECEIVED
APR 12 2012
DEVELOPMENT SERVICES COUNTER

7655 REGISTERED ARCHITECT
Pablo A. De Magistris Castro
STATE OF WASHINGTON

Copyright © 2012 Magellan Associates PLLC
All rights reserved. The documents prepared by the Architect, for this project are instruments of the Architect's service for use solely with respect to this project. Such documents, including this plan, may be copied, reproduced, or transmitted in any form or by any means, existing or future, without the express written permission of Magellan Associates PLLC. No derivative works of this plan may be created without express written permission. The purchase of this set of plans permits the purchaser to use the information for the construction of only one building. Purchase of additional set(s) of plans does not entitle the purchaser to reproduce the plans for building.

Magellan ARCHITECTS
8383 159th Avenue Northeast, Suite 280
Redmond, Washington 98052
Tel (425) 885-4300 Fax (425) 885-4303
www.magellanarchitects.com

BARTELL DRUGS
Washington's Own Drugstores

BARTELL EDMONDS #58 TENANT IMPROVEMENT

23028 100TH AVE W
EDMONDS, WASHINGTON 98020

REVISIONS		
NO.	DATE	BY

ISSUE DATES	
DESIGN APPROVAL:	
PERMIT SUBMITTAL:	4/11/12
PERMIT RECEIVED:	
BID DOCS:	
CONSTR. DOCS:	

24"x36" SCALE:	AS NOTED
PLOT DATE:	4/11/12
CAD FILE:	12-030A31
JOB NUMBER:	12-030
CHECKED:	DYM
DRAWN:	BC
STATUS:	PERMIT

ENLARGED PLAN & REFLECTED CEILING PLANS

A3.1

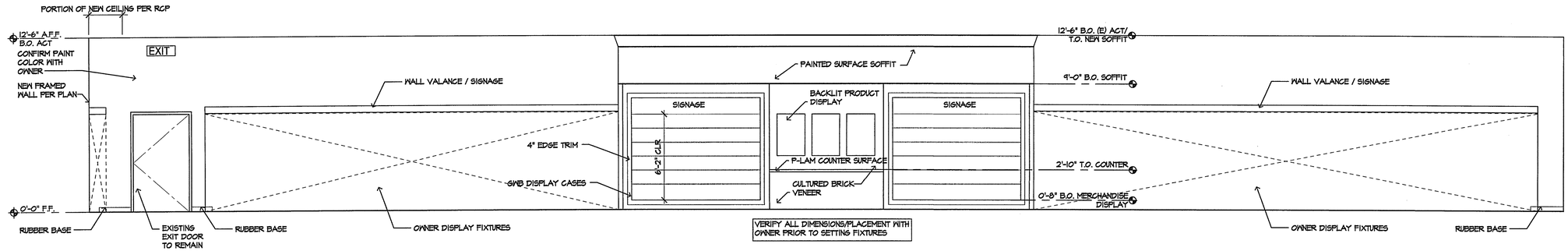

1 NORTH ELEVATION - SALES FLOOR

1/4" = 1'-0"

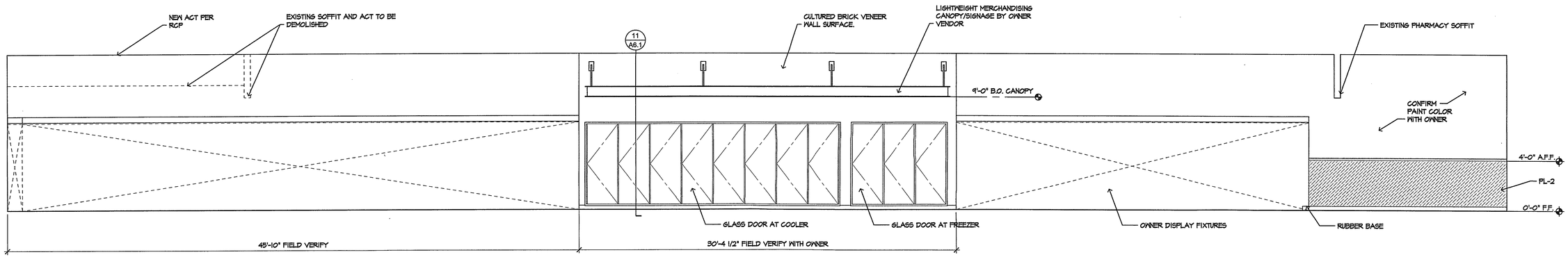

2 SOUTH ELEVATION - SALES FLOOR

1/4" = 1'-0"

ROOM FINISH SCHEDULE

RM. NO.	ROOM NAME	FLOOR	BASE	WALL NORTH	WALL SOUTH	WALL EAST	WALL WEST	CEILING	REMARK
100	(E) SALES FLOOR	VCT	RB	GWB-PT	GWB-PT	GWB-PT	GWB-PT	(E) ACT	PL-2 WAINSCOT TO REPLACE EXIST. FLOOR FINISH PER OWNER. NO RUBBER BASE BEHIND FIXTURES
101	(E) MANAGER OFFICE	EXIST	EXIST	EXIST	EXIST	EXIST	EXIST	EXIST	–
102	(E) STOREROOM	(E) CONC	RB	EXIST	EXIST	PLY-PT	EXIST	NONE	
103	(E) MENS RR	EXIST	EXIST	EXIST	EXIST	EXIST	EXIST	EXIST	
104	(E) WOMENS RR	EXIST	EXIST	EXIST	EXIST	EXIST	EXIST	EXIST	
105	(E) UNISEX RR	EXIST	EXIST	EXIST	EXIST	EXIST	EXIST	EXIST	
106	(E) STORAGE	EXIST	EXIST	EXIST	EXIST	EXIST	EXIST	EXIST	
107	(E) PHARMACY	CPT-1	RB	GWB-PT	GWB-PT	GWB-PT	GWB-PT	EXIST	COORDINATE ANY NEW PAINT COLOR WITH OWNER –

FINISH SCHEDULE LEGEND: REFER TO FLOOR FINISH PLAN FOR ALL VCT SPECIFICATIONS AND LOCATIONS

FLOOR:
CONC: SEALED CONCRETE
CPT-1: 18"x18" CARPET TILES, MATWORKS 'PREFERENCE-EZE' 370Z w/ 3/8" FOAM BACK – SILVER
VCT: VINYL COMPOSITION TILE, PATTERN BY OWNER

WALL BASE:
RUBBER BASE: ROPPE #193; BLACK-BROWN

WALL:
GWB-FT: GYPSUM WALL BOARD, FIRE TAPED, PAINTED
GWB-P1: GYPSUM WALL BOARD, PAINTED BENJAMIN MOORE AF-100 'PASHMINA'
GWB-P2: GYPSUM WALL BOARD, PAINTED BENJAMIN MOORE AF-155 'WEIMERANER'
GWB-P3: GYPSUM WALL BOARD, PAINTED BENJAMIN MOORE AF-505 'BLUE ECHO'
GWB-P5: GYPSUM WALL BOARD, PAINTED BENJAMIN MOORE AF-50 'ETIQUETTE'
PLY-P5: 1/2" FIRE RETARDANT TREATED PLYWD TO 96" A.F.F., PAINTED BENJAMIN MOORE AF-20 'ETIQUETTE'
GWB-P6: GYPSUM WALL BOARD, PAINTED BENJAMIN MOORE AF-340 'OAT STRAW'
GWB-P8: GYPSUM WALL BOARD, PAINTED BENJAMIN MOORE AF-445 'AVENTURINE'
PL-1: PLASTIC LAMINATE, WILSONART #4655-60 'NATURAL LEGACY'
PL-2: PLASTIC LAMINATE, WILSONART #4861 'GOLD ALCHEMY'

CEILING:
ACT: ACOUSTIC CEILING TILE, ARMSTRONG #1763 OR MATCH EXISTING
GWB-FT: GYPSUM WALL BOARD, FIRE TAPED
GWB-PT: GYPSUM WALL BOARD, PAINTED
GWB-T: GYPSUM WALL BOARD, TEXTURED, PAINTED
OPEN: EXPOSED STRUCTURE, NO FINISH

7855 REGISTERED ARCHITECT Pedro de Magalhaes Castro STATE OF WASHINGTON

Copyright © 2012 Magellan Associates PLLC
All rights reserved. The documents prepared by the Architect, as well as the instruments of service for this project are instruments of service for this project. No part of this plan may be copied, reproduced, or transmitted in any form or by any means, electronic or mechanical (including photocopying, recording, or any information-retrieval system), without the express written permission of Magellan Associates PLLC. No derivative works of this plan may be made without express written permission. Any use of this plan or any part thereof for purchasing or using this set of plans for additional site(s) or phase does not entitle the purchaser to construct more than one building.

Magellan ARCHITECTS
8383 158th Avenue Northeast, Suite 280
Redmond, Washington 98052
Tel (425) 885-4300 Fax (425) 885-4303
www.magellanarchitects.com

BARTELL DRUGS
Washington's Own Drugstores

BARTELL EDMONDS #58 TENANT IMPROVEMENT

23028 100TH AVE W
EDMONDS, WASHINGTON 98020

REVISIONS		
NO.	DATE	BY
△		
△		
△		
△		
△		
△		

ISSUE DATES	
DESIGN APPROVAL:	
PERMIT SUBMITTAL:	4/11/12
PERMIT RECEIVED:	
BID DOCS:	
CONSTR. DOCS:	

24"x36" SCALE:	AS NOTED
PLOT DATE:	4/11/12
CAD FILE:	12-030A32
JOB NUMBER:	12-030
CHECKED:	DYM
DRAWN:	BC
STATUS:	PERMIT

SALES FLOOR ELEVATIONS & FINISH SCHEDULE

A3.2

RECEIVED
APR 12 2012
DEVELOPMENT SERVICES COUNTER

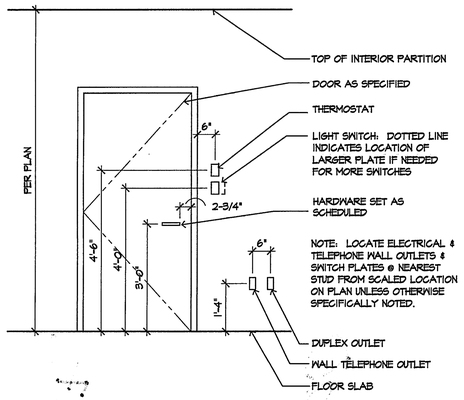

1 MOUNTING HEIGHTS DIAGRAM

1/2" = 1'-0" 12-030A61

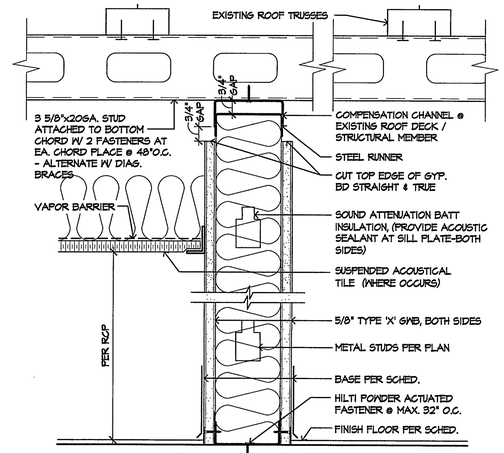

2 FULL HEIGHT PARTITION

3"=1'-0"

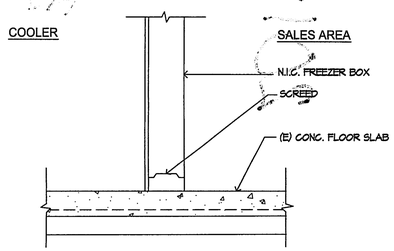

5 SECTION AT FREEZER/COOLER BOX

1" = 1'-0" 12-030A61

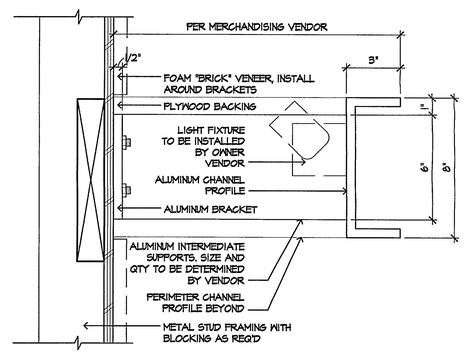

6 WALL VALANCE

3"=1'-0"

NOTE:
PROVIDE CROSS-BRACING FOR SUSPENDED ACOUSTICAL CEILING SYSTEM @ 12'-0" O.C. BOTH WAYS WITH NO. 12 GAUGE WIRES PER ASTM C635 AND ASTM C636. THE HORIZONTAL RESTRAINT POINTS FOR THE LATERAL FORCE BRACING SHALL BE PLACED NOT MORE THAN 12' O.C. IN BOTH DIRECTIONS WITH THE FIRST POINT WITHIN 6' FROM EACH WALL. TO FACILITATE INSTALLATION, MAIN RUNNERS AND CROSS RUNNERS MAY BE ATTACHED TO THE PERIMETER MEMBER AT TWO ADJACENT WALLS WITH CLEARANCE BETWEEN THE WALL AND THE RUNNERS MAINTAINED AT THE OTHER TWO WALLS IN SUCH WAY AS TO BE INDEPENDENT OF THE WALL STRUCTURE AND SHALL BE BRACED BY LATERAL FORCE BRACING AT 12' O.C. MAXIMUM. ACOUSTICAL CEILING SYSTEMS SHALL COMPLY WITH IBC 803.9.

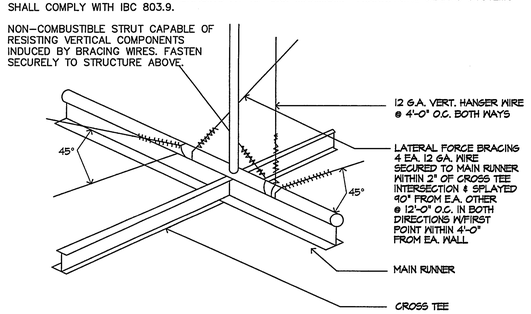

9 SUSPENDED CEILING BRACING

1" = 1'-0"

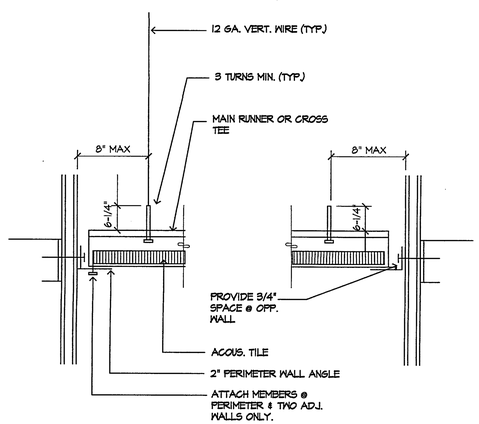

12-030A61

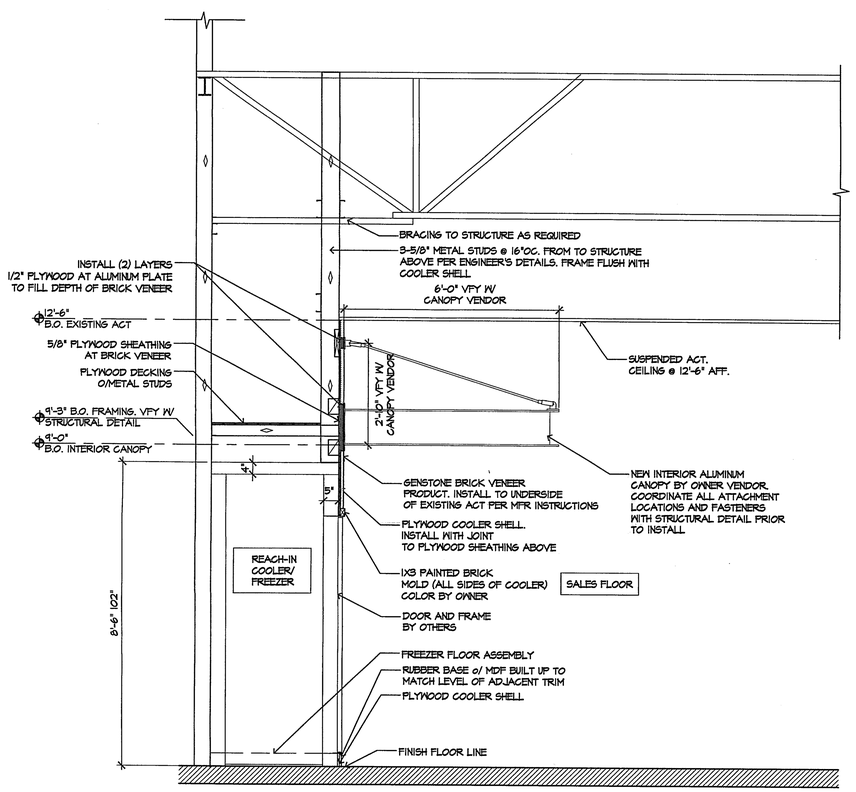

11 SECTION AT COOLER/FREEZER ASSEMBLY & INTERIOR CANOPY

1/2" = 1'-0"

12-030XSC

RECEIVED
APR 12 2012
DEVELOPMENT SERVICES COUNTER

7655
REGISTERED ARCHITECT
Bernardo Magallanes Castro
STATE OF WASHINGTON

Copyright © 2012, Magellan Associates PLLC
All rights reserved. The documents prepared by the Architect for this project are instruments of the Architect's service for use solely with respect to this project. All reports, plans, specifications, field data and documents, or any information related to this project may be copied, reproduced, or transmitted in any form or by any means, electronic or mechanical, including photocopying, recording, or any information retrieval system, without the express written consent of Magellan Associates PLLC. No derivative works of this plan may be made without express written consent. The purchase of this set of plans entitles the purchaser to use the plans for the construction of only one building. The purchase or rental of plans does not entitle the purchaser to resale of these plans or building.

Magellan ARCHITECTS
8383 158th Avenue Northeast, Suite 280
Redmond, Washington 98052
Tel (425) 885-4300 Fax (425) 885-4303
www.magellanarchitects.com

BARTELL DRUGS
Washington's Own Drugstores

BARTELL EDMONDS #58 TENANT IMPROVEMENT

23028 100TH AVE W
EDMONDS, WASHINGTON 98020

REVISIONS		
NO.	DATE	BY
△		
△		
△		
△		
△		
ISSUE DATES		
DESIGN APPROVAL:		
PERMIT SUBMITTAL:	4/11/12	
PERMIT RECEIVED:		
BID DOCS:		
CONSTR. DOCS:		

24"x36" SCALE:	AS NOTED
PLOT DATE:	4/11/12
CAD FILE:	12-030A61
JOB NUMBER:	12-030
CHECKED:	DYM
DRAWN:	BC
STATUS:	PERMIT

INTERIOR DETAILS

A6.1